INSTRUCTION
Handbook
ENG

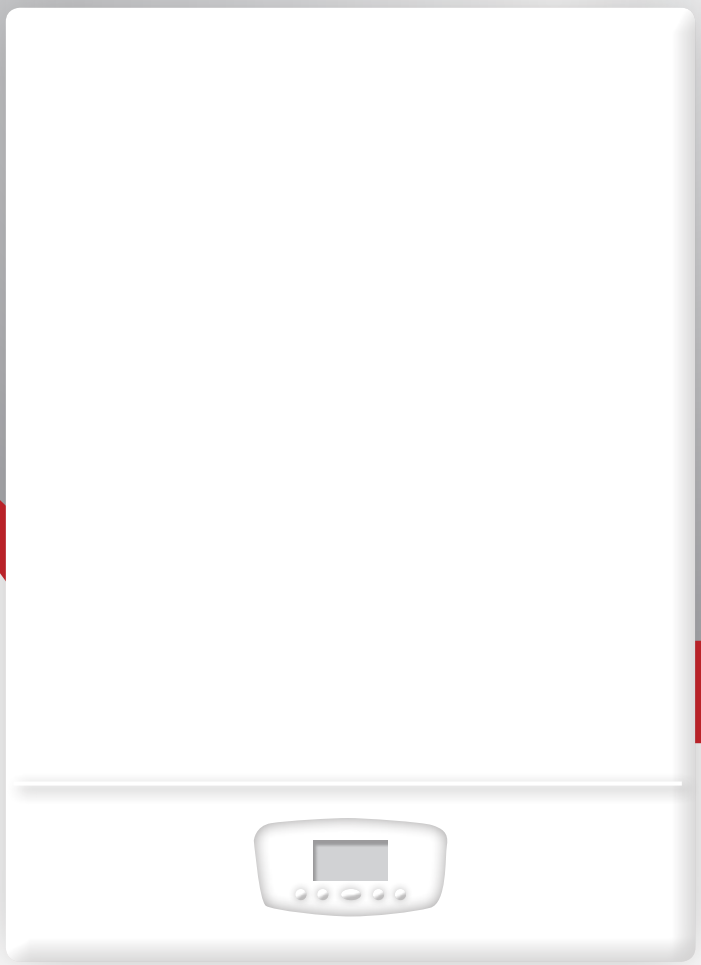

use
installation
adjustment
maintenance

TIME POWER

160 K

Green Heating Technology
ITALTHERM

Caldaie • Scaldabagni • Sistemi Solari • Climatizzatori

READ THE USER WARNINGS CAREFULLY FOR SAFE USE OF THE HEATING UNIT BEFORE USING THE EQUIPMENT.

Symbology

The symbols shown here below are used in the manual to illustrate dangerous situations, or call your attention to special warnings so that you can avoid any risks or accidents, personal injuries or material damage by the operator.

Warnings / notes	Information	Danger / Attention

INDEX

Symbology 2
Setting, use and operating and cut-out codes 4
Command keys 4
Multifunction display 5
Boiler external commands 5
Hot water commands 6
Typical use 6
Preliminary operations 6
Boiler activation 6
Temperature setting 6
Anti-legionella function 6
Time and day setting 6
4-digits display setting 7
Boiler management 7
Boiler forced preparation 7
Boiler program filling 7
Setting of the program of boiler no. 3 - User 7
Menu INFO 8
Holiday Menu 8
SPA function 8
Possible operation failure 8
Burner does not switch on 8
Low domestic water production 9
Boiler inactivity 9
Safety mode 9
Stand-by and anti-freeze/anti-blocking function 9
"Room Anti-Freeze" function 9
Boiler Commissioning Warnings 10
Servicing recommendations 10
GAS connection 11
Dimensions, Connections 11
Connection kit and accessories 12
Hydraulic diagram 13
Connection diagram, flow balancer and remote boiler heating primary circuit 14
Boiler electric diagram: 15
Power supply and safeties electric connections 16
System control electric diagrams 17
Diagram of flow/head available to system (without accessories) 18
Electrical connections 19
Access to electronic board 19
Boiler electric connections 19
Connection to eventual external safety devices 19
Electric connection between boiler and boiler unit 19
External Probe Kit 20
Installation and setting 20
External Probe Kit with optional Remote Control 20
Remote Control Kit 20
Suggestions on Water Characteristics of the system 21
System checks 21
Filling the condensation collecting syphon 21
Water treatment for domestic heating systems UNI 8065 Standard 22
System evaluation procedure 23
Accessories to Be Installed on the System 24
Circulating pump recommendations 24
Filling the Water Circuit 25
GAS conversion 25
Condensation neutralisation filter Kit 25
Flue fitting 26
Boiler parameter setting (technical menu) 27
Boiler main parameters (PC) 27
Combustion control and adjustment 28
Heating max. power adjustment 29
Capacity - display - rotations 29
Settings on electronic board 29
Alarms - boiler shut-down 30
ErP Data - EU 813/2013 33
Product fiche - EU 811/2013 33
Technical data 33
Thermal module components 35

CAUTION

- ▶ Before the installation, it is necessary to read carefully the technical instructions.
- ▶ Before ignition, it is necessary:
  - to read carefully the use instructions
  - to fill the condensation collecting syphon as described on page 21
- ▶ Boiler installation must be performed in compliance with legal provisions (M.D. 12/04/1996 and R dossier) and to UNI 11528 2014 standard or to a relevant installation standard of a EEC country. In any case, it is necessary to remember to:
  - Clean thoroughly the heating system with water before connecting the boiler to the system itself. In case of existing systems and/or particularly dirty, use specific cleaning products having proven effectiveness, in correct quantities according to producer's indications.
  - If the system has a power of up to 350 kW and water used to fill the system has a total hardness of 35°fr, it is necessary to proceed to its softening in order to reduce hardness, while if it has a total hardness between 15°fr. and 35°fr., a conditioning treatment is enough, aiming at ensuring that water features are in compliance with the conditions of the UNI 8065 standard. For systems with power greater than 350 kW, it is necessary to soften the water used for filling if its hardness is greater than 15°fr. These water treatments are necessary also in case of system filling.
  - For systems functioning at low temperatures, water treatment must be carried out with a chemical product for water conditioning in the circuit with filming (protection from corrosion and encrustation), bacteriological and anti-algae action. It is recommended to use a specific chemical product having proven effectiveness according to producer's indications.
  - For domestic hot water production systems, the UNI 8065 standard foresees a safety filter to protect systems. Moreover, if water hardness is greater than 25°fr., it is necessary to use a softener to restore the hardness values under 25°fr.
  - If, in some areas of the heating system or in the boiler installation site, ambient temperature can go below 0°C, it is advisable to pour an anti-freeze solution specific for heating systems into the system (usually made of propylene glycol), following the indications provided by the producer of anti-freeze liquid.
  - After filling the system, it is necessary to purge residual air present in the heating system using air purging valves located on radiators or in the distribution collector of underfloor heating systems.
- ▶ For detailed descriptions of system filling and purging sequences, refer to the instruction booklet of the boiler.

ADDITIONAL OPERATIONS FOR CONDENSING BOILERS:

- ▶ When system is commissioned and in all cases of combustion unit cleaning and following emptying, it is necessary to verify that there is no air in the combustion unit primary circuit; should air be present, proceed to its elimination using the purging valve located on top of the unit itself following the modes described in the instruction booklet of the boiler.

Instructions for the User

Warning notes for the user, for safe use of the heating unit

FOREWORD

The instruction manual furnished with the unit is an essential and integral part of the equipment. Keep the instruction manual handy for further consultation. These warning notes are aimed at ensuring the safe use of the components of heating systems for domestic use and the production of hot water. They indicate the proper behaviour to prevent the original safety features from being jeopardized by improper or wrong installation and by improper, wrong or unreasonable use. The warning notes provided in this guide also seek to make the consumer more aware of safety problems in general, using necessarily technical but easily understood language.

GENERAL WARNING NOTES

FOR THE INSTALLATION IT IS STRICTLY NECESSARY TO COMPLY WITH ALL THE REGULATIONS RELATING TO THE CHARACTERISTICS, INSTALLATION AND USE OF GAS-FIRED EQUIPMENT, ROOM VENTILATION AND THE DISCHARGE OF THE COMBUSTION PRODUCTS, AS PER THE UNI IMPLEMENTATION STANDARDS OF ARTICLE 3 LAW 1083/71 AND LEGAL PROVISIONS.

Installation of the thermal unit must be carried out in accordance with all the latest legally required safety standards, with reference to law No.46 5/3/1990 (System Safety Standards) and application standard Presidential Decree No. 412 26/8/1993, following the manufacturer's instructions and by specially trained staff.

The term 'qualified personnel' refers to those specifically trained in the field of heating systems for domestic use and domestic hot water systems, as foreseen by regulations in force.

- Improper installation can cause injuries to people and animals and damage to property, for which the manufacturer is not responsible.
- After removing the packaging check that there are no broken or missing parts. If in doubt, do not use the equipment and contact your supplier. The packing (wooden crates, clips, plastic bags, polystyrene foam, etc.) are potentially dangerous and must be kept away from children.
- Before carrying out any cleaning or servicing, switch off the equipment from the main supply, using the system's switch or shut-off devices.
- Do not obstruct the ventilation grilles or heat dissipation grilles.
- If there is any fault or if the equipment is not working properly, de-activate the equipment and do not attempt to repair it or tamper with it directly. Contact only qualified personnel. Any repair must be carried out by qualified personnel. Only original spare parts must be used. Failure to observe the above instructions can endanger the safety of the system. To guarantee efficiency and top performance, the system must be serviced annually by qualified personnel. The manufacturer's instructions must be followed.
- If the equipment is not to be used, any potentially dangerous parts should be rendered harmless.
- If the equipment is sold or transferred to a different owner, make sure that the user manual is dispatched together with the equipment so that the new owner and/or installer can read it.
- Only original accessories must be used on systems with optional extras or kits (including electrical parts).
- This equipment should only be used for the purpose for which it was expressly designed.

Any other use is to be considered improper and therefore dangerous.

The manufacturer accepts no liability for any damage caused by improper installation and use or in case of non-compliance with the manufacturer's instructions.

Important: this thermal module is for heating water at a temperature below boiling point at atmosphere pressure. It must be connected to a heating system and/or to a domestic hot water system and must function within its performance and output limits.

The first ignition must be carried out by qualified personnel (e.g. the installer or an ITALTHERM authorised Servicing Centre).

SPECIAL RECOMMENDATIONS

If you smell gas:
- close gas cock,
- open the window,
- do not use any electrical switches,
- extinguish any flames,
- contact the Service Center or installer immediately.

RECOMMENDATIONS FOR USE

- Due to the dangers implied, it is strictly forbidden to use exhausts, fire places, etc. with the thermal module, unless the latter is of the sealed-chamber type or special safety measures are taken during the installation of the thermal module (also in case of future changes or extensions).
- Check system pressure at regular intervals on the hydrometer, and make sure that the reading at cold system is always within the limits specified by the manufacturer. In case of frequent pressure drops, request the assistance of qualified skilled personnel to eliminate any water leakage from the boiler.
- Every time the gas cock is reopened, wait for a few minutes before starting the thermal module again.
- In case of long inactivity periods, close the gas cock and disconnect the main power supply.
- During and for some time after thermal module operation, avoid touching hot parts such as fume box, flue duct, etc. Any contact with hot parts can lead to serious burns.
- Do not expose the suspended thermal module to the direct steam coming from the hobs.
- Do not let the thermal module get wet from splashing liquids or water.
- Do not place anything on top of the thermal module.
- Do not allow children or inexperienced persons to use the thermal module.
- In case of temporary disuse the following steps should be carried out:
  a) empty the water system, if there is no antifreeze;
  b) switch off electricity, water and fuel supplies.
- If the thermal module is no longer to be used at all, qualified personnel should carry out the necessary operations, checking that the electricity, water and fuel supplies are switched off.
- Before carrying out any operation that involves disassembling the boiler or opening covers or inspection doors, switch off the power supply and turn off gas supply cocks.

Setting, use and operating and cut-out codes

Note: *the equipment is pre-set to pilot a domestic hot water production system (besides the heating system). It is possible that some commands or displays related to domestic water production are present, even if the relevant system is not physically connected.*

Command keys

Note: *descriptions relate to standard function. In particular cases, e.g. programming, menu activation or in presence of original Remote Control kit (optional), keys may be deactivated or have different functions from the ones described.*

⏻	**Stand-by / Operating mode** At each pressure, boiler switches cyclically from OFF mode to Summer and Winter operating modes. The present mode is indicated by the writing **OFF**, or through the simultaneous presence of the symbols and (Winter mode) or of the symbol but not of the symbol (Summer mode) or (Only Heating mode).	Only if combined with domestic water boiler
+ / −	**Heating adjustment** They adjust heating system temperature. If External Probe Kit is installed, see also *"External Probe Kit" on page 20*.	
+ / −	**Hot water setting:** They adjust water temperature in domestic water storage. As for hot water temperature, see also "Hot water commands" on page 6.	Only if combined with domestic water boiler
INFO	It shows on the display additional information related to boiler operation. (For details, see "Menu INFO" on page 8).	
RESET	Press it in order to restore boiler operation after a shut-down. See "Alarms - boiler shut-down" on page 30 for details on possible shut-downs.	
plus	It manually sets activation and deactivation of the boiler quick preparation function.	Only if combined with domestic water boiler
	It activates automatic time programming of the boiler preparation function. It is used also in its programming and in the clock setting.	Only if combined with domestic water boiler

Multifunction display

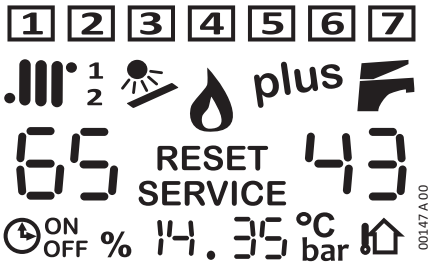

1 … 7	**Day of the week** Displayed: during programming, during standard operation if programming is activated.
	Heating - Winter mode If it flashes, it indicates that the boiler is working in heating mode.
1 2	**Heating request area** It indicates from which area (main "1", secondary "2" or both) heating request comes from. **Domestic water programming time frame** During domestic water programming (see "Setting of the program of boiler no. 3 - User" on page 7) it indicates which time frame, between the two available ones, is being programmed
	Available solar system (if connected to the boiler through optional Solar Board) When boiler is heating solar storage, symbol flashes.
	Burner working
plus	**Quick boiler preparation** It indicates that the quick boiler preparation function has been activated. It flashes when the boiler is carrying out the quick preparation.
	Domestic water - storage heating It indicates that the boiler is enabled for domestic water heating. If it flashes, it indicates that the boiler is heating.
65	**Heating temperature**, in °C (2-digits indicator under the symbol) It usually indicates the ***delivery temperature***, i.e. the temperature of the liquid circulating in the heating system, coming out of the boiler. During heating temperature adjustment (through keys + and −) **it displays the set value**.
RESET	It is displayed when the boiler is shut down or there is an error which can be reset by the User. See "Alarms - boiler shut-down" on page 30 for error identification and for actions to be undertaken according to each different case.
SERVICE	It is displayed when the boiler has a fault or there is an error which can be reset by the Technician. The user can refer to "Alarms - boiler shut-down" on page 30 for further information and any possible actions to be undertaken according to each different case.
43	**Domestic water temperature**, in °C (2-digits indicator under the symbol) It indicates the domestic water storage set temperature.
	It indicates that the boiler preparation function is active in a programmed mode.
ON OFF	It indicates, with the symbol , if at the present moment the boiler preparation function is set to **ON** or **OFF**.
%	It is displayed when the two digits on its right indicate the boiler operating power. This information is displayed only while menu INFO is used (see "Menu INFO" on page 8).
14.35	These four digits, in the display lower central area, show different information, e.g. during normal operation: present time, heating system pressure, temperature measured by external probe (in this last case, only if the symbol is visible). While menu INFO is used, other data are displayed. For the setting of the dimension to normally show, see"4-digits display setting" on page 7; for other relevant information see "Menu INFO" on page 8. When boiler is electrically powered, but in **OFF** mode, this indicator shows the writing **OFF**.
°C bar	They show the type of displayed data item on their left. If they are both switched off, the data item is either a time or expressed in a unit of measurement other than Bar or °C.
	It indicates that the external temperature probe (optional) is connected to the boiler. ***Note:*** *in this case, system temperature is automatically adjusted and the use of keys + and − is different: for details refer to the kit documentation and to paragraph "External Probe Kit" on page 20.*

Boiler external commands

Outside the boiler, conveniently positioned in the property (usually by the installer or by the person in charge of installing the electrical system), there are two devices that must be used by the user. Their presence and features are prescribed by rules in force:

Omnipolar switch: it is usually positioned near the boiler and must completely isolate the boiler from domestic mains supply. It must be used each time the boiler needs to be electrically powered, or when power supply of the equipment has to be switched off, e.g. in case of long inactivity periods (see "Safety mode" on page 9) or in some alarm cases (see "Alarms - boiler shut-down" on page 30).

Ambient thermostat: it electrically commands to the boiler the activation or the switching off of the heating system, in order to maintain ambient temperature (detected by one of its sensors) approximately at a value set by the user. Current regulations describe its positioning, temperature limits within which the user can adjust it and the switching on and off periods of the heating system.

Note: *ITALTHERM offers an advanced chronothermostat, with weekly programming at multi-level temperature and other innovative functions. Furthermore, a version with* ***radio frequency connection*** *and a version with* ***GSM command*** *are available.*

Hot water commands

As for hot water production, boiler was designed to be integrated in a system with domestic hot water storage, usually combined with a solar system and supplied with specific indicators and commands for domestic water adjustment supplied to users.
Only when a storage temperature probe is directly connected to the boiler, the use of the keys + and − determines the temperature at which water in the storage is heated. If there are no adjustment commands downstream of the boiler unit, this one regulates water temperature to the user. Otherwise, adjustment of domestic water temperature in the boiler will affect only the maximum available* temperature and the "duration" of hot water availability.

(if external systems, e.g. solar systems, do not supply heat).*

More complex systems can manage directly both storage temperature (forcing, if necessary, heating by the boiler) and temperature to the user. **See documentation supplied with the system** *or ask the installer or the designer for information*.

Storage high temperatures enhance formation of boiler scale deposits. Also **gas consumption** depends both on the set temperature and on the boiler thermal insulation quality.

Note: *Because of thermal dispersions along pipes, some time might be required before temperature stabilizes when it comes out of the cock.*

If hot water production system is missing, leave the domestic hot water at factory setting. **55°C**.

Typical use

Preliminary operations

- Make sure that the gas cock is open.
- Make sure that the boiler is electrically powered and in **OFF** mode: only the writing **OFF** is displayed.

Boiler activation

- Press key ⏻:
  - once, in order to use boiler in Summer mode, i.e. use it for hot water production only. The Summer mode is indicated on the display by the symbol and not the symbol ;
  - press it again in order to use boiler in Winter mode, i.e. use it both for heating and for hot water production. The Winter mode is indicated on the display by the symbols and are simultaneously displayed.
  - press it again in order to use boiler in Only Heating mode, i.e. disable boiler preparation (only the relevant anti-freeze function stays active). The Only Heating mode indicated on the display by the symbol and not the symbol ;
  - at each further pressure of the key ⏻, boiler cyclically switches to the modes OFF, Summer , Winter + and Only Heating .
- In Winter + mode, upon request by Ambient Thermostat, burner switches on and the produced heat is transferred, through thermal fluid, to the property heating elements. In case of simultaneous request of hot water, this last request takes priority for the whole duration of the request itself. Since boiler preparation requests have a limited duration in time, they usually do not affect room heating.

Temperature setting

Note: *a correct setting contributes to create the conditions for energy saving.*

Note: *if a Low Temperature system Kit or an External Probe Kit is installed, refer to heating system documentation for its temperature setting.*

Note: *the heating system temperature described here shall not be confused with the ambient temperature set on the ambient thermostat.*

- **Heating setting:** pressing keys + and −, it is possible to set heating system temperature (the value, during setting, is displayed under the symbol). In general, during advanced wintertime and/or in case of insufficient insulation of the property (or if the burner stays on for a long time, but ambient temperature struggles to reach the value set on ambient thermostat), it is advisable to set a higher system temperature. On the other hand, if ambient temperature considerably exceeds, due to thermal inertia, the value set on the thermostat, system temperature should be reduced. ***With the optional external probe kit, system temperature is automatically set and the use of the keys + and − is different:*** *for details, see* also *"External Probe Kit" on page 20*.
- **Hot water adjustment:** pressing keys + and −, it is possible to set hot water temperature in the boiler unit storage (the value is displayed under the symbol). As for hot water temperature, see also "Hot water commands" on page 6.

If hot water production system is missing, leave the domestic hot water at factory setting. **55°C**.

Anti-legionella function

At pre-established intervals, boiler in Summer or Winter mode heats up boiler water automatically in order to eliminate any bacteria (in particular *Legionella°spp.*) which tend to form in presence of still and lukewarm water. The activation, if at all, of function, frequency and treatment duration can be set by the Technician.

Note: *The anti-legionella function is not active when boiler is set to* **OFF** *or to Only Heating mode* .

Time and day setting

Note: *after 20 seconds without pressing any key, the function is quit without storing.*
The time and day setting is particularly important if time-related functions want to be used, e.g. weekly programmer and Holiday Menu.

- With boiler in OFF mode, press key for at least 5 seconds;
- hours digits flash: set using keys + and −;
- press key . minutes digits flash: set using keys + and −;
- press key . One of the indicators of the day of the week **1** ... **7** flashes: set with keys + and −.

  Note: *you can set the week, e.g. with Monday as first day* **1** *(e.g. if today was Wednesday we would set number* **3***) or any other day, to your discretion.*
- store data and quit the setting by pressing for at least 3 seconds.

Green Heating Technology ITALTHERM

4-digits display setting

During normal operation, the 4 digits located at the bottom, in the middle of the display, can show:

- no indication (if you wish that nothing is displayed)
- no indication (data item not available in this model, so non-supported function)
- present time (if time has not been set yet: no indication)
- heating system pressure
- temperature measured by the external probe (only if external probe is installed and as a consequence visible is displayed; otherwise **– – °C**" is going to be displayed)

In order to choose the data item you want to visualise:

▶ with boiler in Summer or Winter mode (not in OFF), PRESS KEY INFO once or more times until the desired visualisation is displayed.

Boiler management

Note: *if the system clock has not been set yet (see "Time and day setting" on page 6), it is not possible to use the boiler weekly programming functions.*

Boiler forced preparation

Pressing the button plus, you can immediately activate (and/or accelerate, according to the case) a boiler heating cycle. This function is automatically deactivated at the end of the cycle.

▶ if boiler was activated short before (both in standard and programmed mode), function heats storage more quickly (symbol plus flashing) and ends when boiler reaches temperature;

▶ if boiler is managed in programmed way and in an inactive time frame (symbol OFF), a quick heating cycle is activated (symbol plus flashing), therefore the storage stays in temperature for the rest of this slot (with symbol plus fixed). At the next active time frame, program resumes its normal operation. Programming is not modified.

▶ In order to deactivate beforehand the function, press the key plus (the symbol plus disappears).

Boiler program filling

Note: *after 20 seconds without pressing any key, the function is quit without storing.*
It is possible to load one of the three available weekly boiler programmes: two of them are pre-set in the factory and stored permanently in the boiler memory; the third program can be set as described later.

Program 1: ON MON÷FRI 06:00÷09:00 and 17:00÷21:00; SAT÷SUN 06:00÷10:00 and 16:00÷21:00
Program 2: ON every day 06:00÷10:00 and 16:00÷21:00
Program 3: the program **can be set by the user** (when boiler is new, it is the same as program 1).

▶ with boiler in Summer or Winter mode (not in OFF nor in Only Heating), press the key for at least 5 seconds: display shows the number of the program currently selected (P1, P2, P3), on the right;

▶ select the desired program using keys + and – and press key to load the program;

- with **P3** (settable program) program data are displayed: from here it can be modified as showed in "Setting of the program of boiler no. 3 - User" on page 7 or load it by pressing for at least 5 seconds;

▶ at this point the boiler switched back to Summer or Winter. In order to operate the boiler in a programmed way, press the key : the display must show the symbol ON (or OFF according to the present time frame).

Setting of the program of boiler no. 3 - User

Note: *after 2 minutes without pressing any key, the function is quit without storing.*

1. Determine one or two time slots, for each day of the week, in which you intend to use warm water and in which you wish that boiler water is maintained in temperature. The days of the week can have different or the same time slots, as required.
2. with boiler in Summer or Winter mode (not in OFF nor in Only Heating), press the key for at least 5 seconds:
3. select the program **P3** using + and – and press key to load the program;
4. the display shows the present day (e.g. day **1**), a small number **"1"** in the top left side of the display, the symbol ON and a time, which at the moment corresponds with the **activation** of the boiler preparation, in the first **time frame** of the **first day**, it is set to the indicated time;
5. press the key to modify the time, which starts flashing;
6. use keys + and – to modify the **initial time** of the **first time frame** of boiler preparation (steps of 10 minutes each) then press key +.|||°;

Note: *set times are stored only if key +.|||° is pressed. This will set programming on the following event.*

7. the symbol OFF and another time are displayed, which means that at the moment the first **deactivation** of the boiler preparation, of the first day, is set to the indicated time.
8. press (time flashes); with + and – modify the **final time** of the **first time frame** of boiler preparation (steps of 10 minutes each) then press key +.|||°;

+ .|||° –	SLOT or DAY onward - backward
+ –	TIMETABLE increases - decreases

9. the display shows a small number **"2"** in the top left side of the display, the symbol ON and a time, indicating that the **second time frame** of the boiler preparation is being programmed, of the same day. Proceed to programming as in the first time frame;
10. after pressing the key +.|||° for the last time, you switch to day **2** which can be set by repeating what described above for day **1**, or **copy** programming of day **1** on day **2**:
    - go back to day **1**, already programmed, pressing key –.|||°. Press key INFO for 5 seconds: symbol of day **2** flashes;
    - press to confirm copy of day **1** on day **2** and automatically switch to the latter;
    - similarly, in order to repeat the copy on day 3 etc., it is sufficient to press key INFO for 5 seconds and press to confirm;
11. exit the setting and switch back to Summer or Winter mode pressing the key for at least 5 seconds.

Menu INFO

The display can show various information related to the boiler operation, divided into different "screens". They are usually useful to the Technician, but their display by the user does not affect the correct boiler operation.

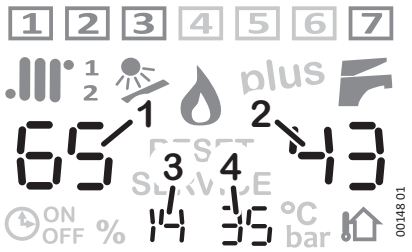

- ▶ with boiler in Summer or Winter mode (not in OFF), press the key INFO for at least 5 seconds;
- ▶ the display shows the **screen** 1 **:** information about the present **operating status**:
  - 1 ... 7 **:** boiler cycle in progress (information for the technician)
  - heating, domestic water: visible symbol = available function; if flashing = in progress (activated); 1/2 active area/s, solar system,
  - = burner working
  - numeric indicator **1**: system delivery temperature (°C, measured)
  - numeric indicator **2**: domestic water temperature (°C, measured)
  - numeric indicator **3**: burner power (% 0-99; 0=minimum, 99=maximum)
  - numeric indicator **4**: system return temperature (°C, measured)
- ▶ press key +: display shows the **screen** 2 **:** information about the various boiler **settings**:
  - heating, domestic water: support the meaning of numeric indicators;
  - numeric indicator **1**: main area system delivery temperature (set). If external probe is present , ignore this data item
  - numeric indicator **2**: domestic water temperature (°C, set)
  - numeric indicator **3**: secondary area system delivery temperature (set).
- ▶ press button +: display shows the **screen** 3 **:** information about the **thermoregulation**, only if external probe is present:
  - heating, 1/2 active area/s, external probe: support the meaning of numeric indicators;
  - numeric indicator **1**: system main area delivery temperature, calculated according to external temperature measured by the probe and to thermoregulation curve **kd** set (if request is in progress)
  - numeric indicator **2**: thermoregulation curve number **kd** set
  - numeric indicator **3**: system secondary area delivery temperature, calculated according to external temperature measured by the probe and to thermoregulation curve **kd** set (if request is in progress)
  - numeric indicator **4**: external temperature, measured by the probe; if it indicates **–9°C** it means that external temperature is of -9°C or lower
- ▶ press key +: if solar system is present *and interfaced to the boiler through the Solar Board (optional original accessory)*, the display shows the **screen** 7 **:** information about the **solar**:
  - 1 ... 7 **:** Solar system type (information for the technician);
  - numeric indicator **1**: collector delivery temperature (solar panel)
  - numeric indicator **2**: solar boiler temperature, upper part
  - numeric indicator **3**: return temperature towards collector (solar panel)
  - numeric indicator **4**: solar boiler temperature, lower part
- ▶ pressing keys + and – screens scroll from one direction or the other;
- ▶ to quit the menu INFO and go back to standard display, press key INFO. After 15 minutes, switch to standard display is automatic.

Holiday Menu

Note: *this function can be used only if clock has been set (see "Time and day setting" on page 6).*

This function enables to switch boiler to OFF for a number of days chosen by the user, after which boiler will switch to Winter mode again (or, if optional Remote Control is present, it will switch to the operating mode in which it was while boiler will activate in Summer mode to enable correct operation of Remote Control).

- ▶ With boiler in OFF mode (not in Summer nor in Winter), press key for at least 5 seconds;
- ▶ the display shows, on the left, the writing "Ho" (first letters of HOliday) and the symbol while on the right a number;
- ▶ use keys + and – to modify number of days OFF (do not consider current day);
- ▶ store and start Holiday cycle by pressing key for 3 seconds. The Holiday function ends at 23:59:59 of the last set day (according to boiler clock).

Note: *It is then possible to set the boiler in different modes from OFF, but* ***the Holiday function will be effective only if boiler is set back to OFF.***

SPA function

Note: *If the Remote Control is installed (optional), this function can be managed only from it.*

This function forces the domestic water temperature to the maximum value, for a period of **60** minutes, after which the function is automatically deactivated.

- ▶ with boiler in Summer or Winter mode (not in OFF), press the key plus for at least 5 seconds;
- ▶ the display shows, low and in the middle, the writing **"SPA"** and the number under the symbol flashes;
- ▶ to deactivate the function before the set time, press one of the keys + or –.

Possible operation failure

Do not carry out any technician-specific operation, e.g. on electric circuit, hydraulic circuit or gas circuit, and any other operation not described in the chapter "User Guide" and expressly intended to the User. Contact only qualified personnel.
Boilers must be equipped exclusively with original accessories.
ITALTHERM cannot be considered responsible for any possible damage resulting from improper, wrong or unreasonable use of non original materials.

Burner does not switch on

- ▶ if room thermostat (or chronothermostat or similar) is installed, check that it is actually requiring room heating;
- ▶ verify that there is electric power supply and that boiler is not set to **OFF**, but to Summer or Winter + . The relevant symbols must be visible on the display (see details in paragraph "Multifunction display" on page 5);
- ▶ if the display shows the signal **RESET** or **SERVICE** , or if there is a faulty behaviour, read paragraph "Alarms - boiler shut-down" on page 30;
- ▶ pressure in the boiler must be correct (1÷1.5 bar, **cold**) and in any case **not lower than 0.5 bar**.

Green Heating Technology ITALTHERM

Low domestic water production

- ▶ Check that domestic water temperature is not set to a too low value, in this case adjust it (see "Temperature setting" on page 6);
- ▶ have the gas valve adjustment checked;
- ▶ have the domestic water coil pipe checked and, if necessary, have it cleaned.

(i) N.B.: In areas where water is particularly "hard", it is advisable to install on domestic water inlet a suitable device which prevents limescale precipitation; too frequent cleaning operations of the boiler coil pipe are thus not carried out.

Boiler inactivity

Effects of inactivity periods can be relevant in particular cases such as in homes used for few months a year, mostly in cold locations.
The User will have to evaluate whether **switch the boiler to the safety mode** and disconnect all supplies or whether **leave it set to OFF (powered) to use the anti-freeze function**. In general, the safety mode is preferred. When freezing may occur, it is advisable to choose between pros and cons of the safety mode and of the stand-by/anti-freeze mode.

Safety mode

- ▶ Switch off the general switch on the electric supply line of the boiler;
- ▶ Close gas cock;

(i) If temperature can go below 0°C, have the following operations carried out by your technician:

- fill the system, including the boiler unit primary circuit and the relevant coil pipe, with anti-freeze solution (except when system has already been filled with this solution), or have it completely emptied. Should pressure have to be restored (due to possible leakages) in a system already filled with anti-freeze solution, its concentration might decrease and the anti-freeze protection might no longer be ensured.
- in any case, have the condensation-collecting siphon emptied after unscrewing its lower cap.
- have the domestic hot and cold water system emptied, including the domestic water circuit and the boiler domestic water storage.

Note: *The boiler is equipped with a system which protects the main components from the rare blocking cases due to inactivity in presence of water and limescale. The anti-blocking system cannot work during the safety mode due to lack of power supply.*

(i) Before switching on the boiler, **make sure that the circulating pump is not blocked** due to inactivity: in the middle of the cap there is a hole (should there be a cap, remove it) that gives access to the rotor shaft; **push and turn it using a suitable tool**, usually a "Phillips" screwdriver.

Stand-by and anti-freeze/anti-blocking function

When boiler is left to OFF for the inactivity period, it will be protected from freezing through functions set in the control equipment which heat the concerned parts when temperatures go below the minimum values predefined in the factory. Anti-freezing heating is reached through switching on of the burner and of the circulating pump.
Moreover, boiler in stand-by periodically activates main internal components to avoid the rare blocking cases caused by inactivity in presence of water and limescale. This happens also when boiler is shut down (red light on), but only if system pressure is correct.
In order for these systems to be active:

- boiler must receive power and gas supply;
- boiler must be left in OFF mode (writing **OFF** displayed);
- system water pressure mus be regular (optimal: 1÷1.5 bar, cold, minimum 0.5 bar).

If, in case of gas supply interruption or boiler shut-down (red light on), for this or other reasons, boiler cannot be switched on. In this case, the anti-freeze function is carried out by activating circulating pump activation.

(i) ATTENTION: anti-freeze protection cannot be activated in case of lack of electric power supply. Should this be likely to happen, it is advisable to pour a good-brand anti-freeze solution in the heating system, following producer's indications.
It is necessary to ask directly the installer information about the anti-freeze solution poured in the heating system at the moment of installation.
The boiler, when power supply is restored, will check temperatures detected by its probes and in case freezing should be suspected, verified through a particular automatic check cycle, alarm 39 will be triggered. For details see relevant description in paragraph "Alarms - boiler shut-down" on page 30.

(i) It is recommended to have the domestic hot and cold water system emptied, including the domestic water circuit and the boiler domestic water storage. The anti-freeze function does not protect the domestic water cycle outside the boiler.

"Room Anti-Freeze" function

Note: *if you want to use the "room anti-freeze" function available in many commercial chronothermostats or thermostats, it is necessary to leave the boiler in Winter mode* **+** *and* ***NOT in OFF mode****.*

(i) The "Room Anti-Freeze" function does not ensure protection of the domestic water circuit outside the boiler, in particular of the areas not reached by the heating system. It is therefore necessary to have the parts of the domestic hot and cold water system emptied, including the boiler domestic water storage, should these be likely to freeze.

Boiler Commissioning Warnings

Boiler commissioning and servicing must be carried out by qualified technicians. The conversion of a gas belonging to one family (natural or liquid gas) to one belonging to a different family can be made also after the boiler has been installed, and must be made by qualified personnel only. The expert will have to check:

a) that the data on the identification plate comply with those of mains power, water and gas supply lines;
b) that the calibration of the burner is compatible with the boiler power;
c) the correct function of the fume exhaust duct;
d) that combustion, air infeed and fume discharge are carried out correctly based on the provisions of the prevailing National and Local Standards (M.D. 12/04/96; UNI 11528:2014 standard; P.D. 412/93 and following amendments);
e) that the aeration conditions are ensured if the boiler is housed inside furniture cabinets.

SAFETY LAWS AND STANDARDS FOR BOILER INSTALLERS

Italian Legislative Decree 19/09/94, no. 626
"Implementation of 89/391/EEC; 89/655/EEC, 90/296/EEC, 90/934/EEC, 90/679/EEC directives for the improvement of the health and safety of workers in the workplace"

D. Lgs, 04/12/1992, no. 475
"Implementation of 89/686/EEC Council Directive of December 21, 1989 concerning the harmonization of Member States' national laws on personal protective equipment (PPE)"

When handling, installing and servicing boilers, take special care with the metal parts in order to avoid any injury such as cuts and abrasions. Always wear gloves during the aforesaid operations.

REFERENCE LAWS AND STANDARDS RELATING TO THE INSTALLATION, USE AND SERVICING OF BOILERS

Law 05-03-90 no. 46
"Systems Safety Standards".

Presidential Decree 06-12-91 No.447
"Regulation for the Implementation of Law No. 46 dated March 5th 1990 on systems safety standards".

Law No. 10 dated January 9th 1991
"Standards for the implementation of the National Energy Plan on the rational use of energy, energy saving and renewable sources of energy development."

Presidential Decree Presidential Decree No. 412 dated August 26th 1993 and following amendments "Regulation providing standards for the installation and servicing of building heating systems for the containment of energy consumptions, as implementation of art. 4, paragraph 4 of Law No. 10 dated January 9th 1991."

ATTACHMENT G TO PRESIDENTIAL DECREE No. 412 dated August 26th 1993 and Ministerial Decree dated March 17th 2003 "System Manual".

UNI 11528:2014 standard.

Electrical Systems IEC 64-8 standard.

Servicing recommendations

All servicing and gas conversion operations SHALL BE CARRIED OUT BY QUALIFIED PERSONNEL pursuant to Law No. 46 dated March 5th 1990, and in compliance with UNI 11528:2014 standard and subsequent updates. In addition, SERVICING operations shall be carried out based on the schedule recommended by the manufacturer and in compliance with the prevailing UNI and IEC standards. To ensure good boiler performance, servicing should be carried out at least once a year.

- Removal of any possible oxidization from burners;
- Cleaning of any scale from exchangers and electrodes;
- Check of good condition and stability of the ceramic fibre coating inside the combustion chamber and replacement, if needed;
- Switching on, switching off and operation of the device control;
- Check of water and gas connecting pipes and couplings sealing;
- Check of gas consumption at max. and min. power values;
- Check of proper operation of safety devices;
- Check for correct operation of equipment command and adjustment mechanisms;
- Periodical check of correct operation of fume exhaust duct.
- Do not clean the room where boiler is installed when this latter is working;
- System panels shall be cleaned with soapy water, only. Do not clean panels, painted and plastic parts with paint diluents.
- Any time some part needs changing, always use original spare parts supplied by ITALTHERM .

ITALTHERM declines any responsibility for the installation of non-original spare parts.

"Once checking and servicing operations are completed, the operator shall write and sign a report, to be given to system manager, who will have to sign a copy for receipt and acknowledgement. ..." (Presidential Decree 412/93 and subsequent amendments);

GAS connection

Carry out the following checks:

a) cleaning of all the gas intake pipes to remove any residue which may impair the boiler operation;

b) check that the gas supply line and gas train comply with current standards and regulations (UNI 11528:2014 standard - M.D. of 12/04/96);

c) check the inner and outer seals of the gas supply system and connections;

d) supply pipe shall have a section equal to or higher than that of boiler;

e) check that the supplied gas corresponds to the gas used for boiler setting; if this is not the case, have the boiler settings changed by qualified and authorised personnel;

f) check that a shut-off cock is installed upstream of the system.

Open the meter cock and bleed the air off system pipes, then bleed air off each piece of equipment.

Dimensions, Connections

ATTENTION! **Remove all the plastic caps** placed to close the hydraulic connections and the condense outlet hose of the boiler

ATTENTION! Position boiler so as to leave a space under it that allows the installation of the eventual safety devices (as required by the local/national regulation in force) and the relevant connection fittings. It is advisable to leave at least **1100 mm**.

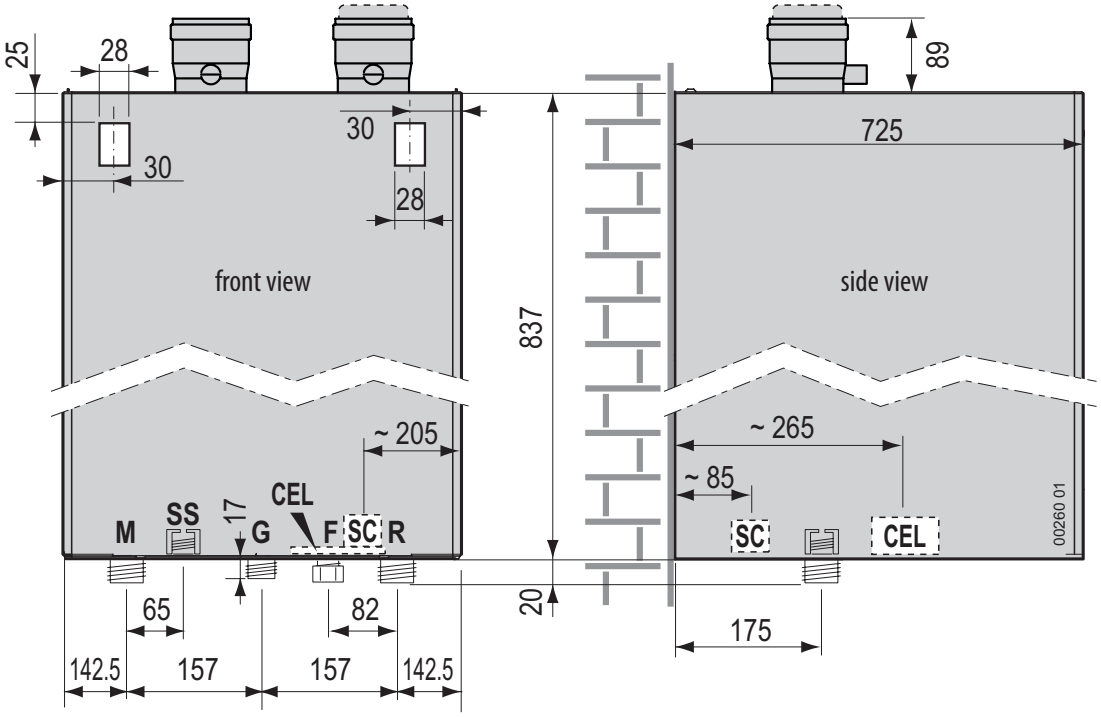

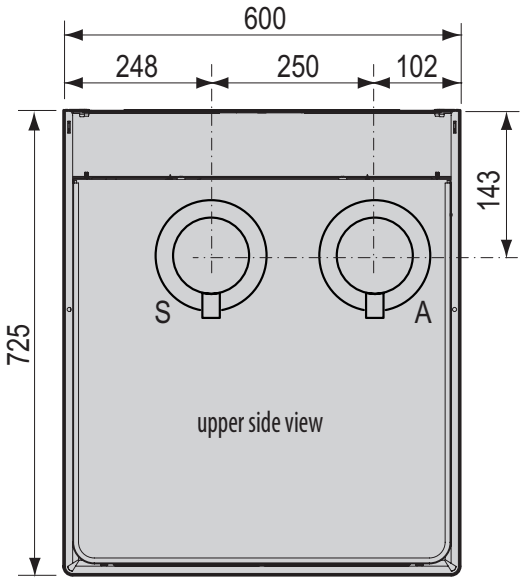

Legend:

A Suction (Ø 100 mm)
S Discharge (Ø 100 mm)

M System delivery (1¼"M)
SS Safety valve discharge (¾"F)
G Gas (1"M)
SC Condensation discharge (Ø 25mm) (approximate position)
F System filling connection point, with cap (½"M)*
CEL Electric connections (approximate position)
M System return (1¼"M)

* **includes non-return valve.** Any shut-off devices for system filling, outside the boiler, are managed by the installer. If the connector is not used, leave it closed using a sealed cap.

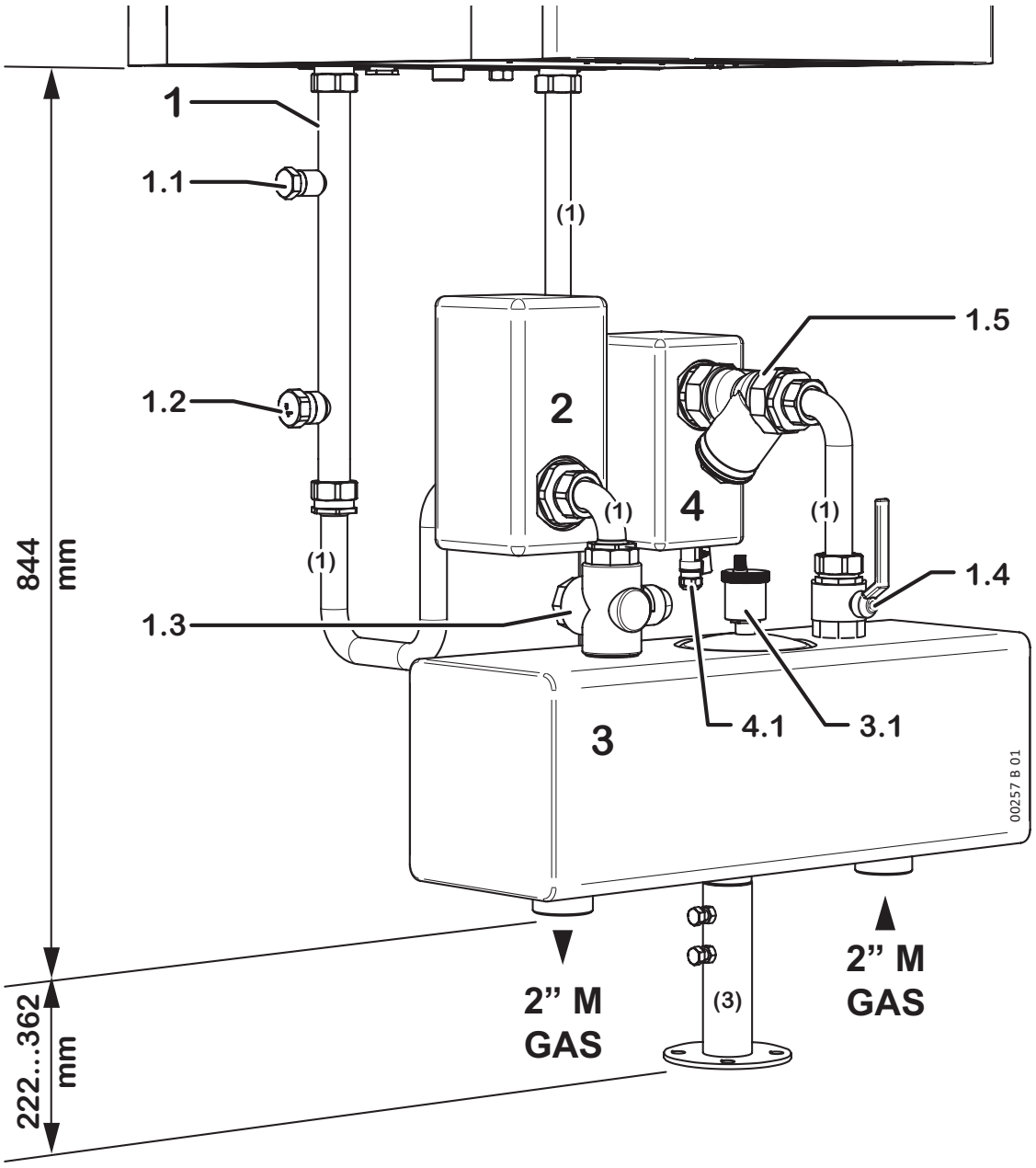

KEY

1 Connection Kit
- **1.1** Expansion tank connector
- **1.2** Connector not used with this heat generator model (keep it closed)
- **1.3** 3-way shut-off delivery valve.
- **1.4** Return shut-off valve
- **1.5** "Y" filter

2 Micro bubble separator kit

3 Insulated, horizontal flow balancer kit
- **3.1** Air purging valve

4 Micro impurity bubble separator kit
- **4.1** Discharge cock

Plate exchanger
(alternatively to balancer ***3****)*

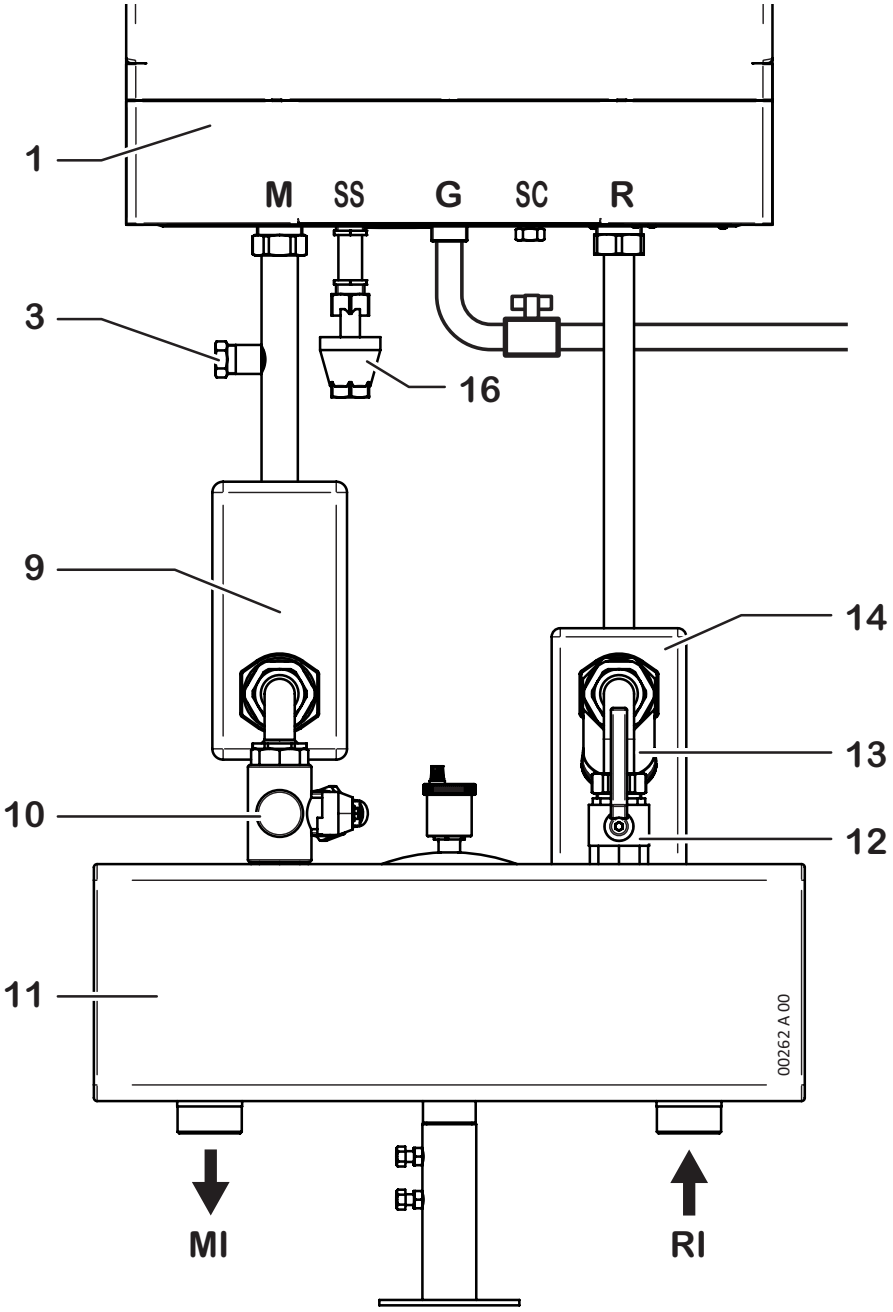

KEY

1 Heat generator

3 Expansion tank connector

9 Micro bubble separator

10 3-way shut-off delivery valve.

11 Flow balancer

12 Return shut-off valve

13 "Y" filter

14 Micro impurity bubble separator kit

M Thermal module delivery

SS Safety valve discharge

G Thermal module Gas inlet

SC Condensation drain

R Thermal module delivery

MI System delivery

RI System return

Connection diagram, flow balancer and remote boiler heating primary circuit

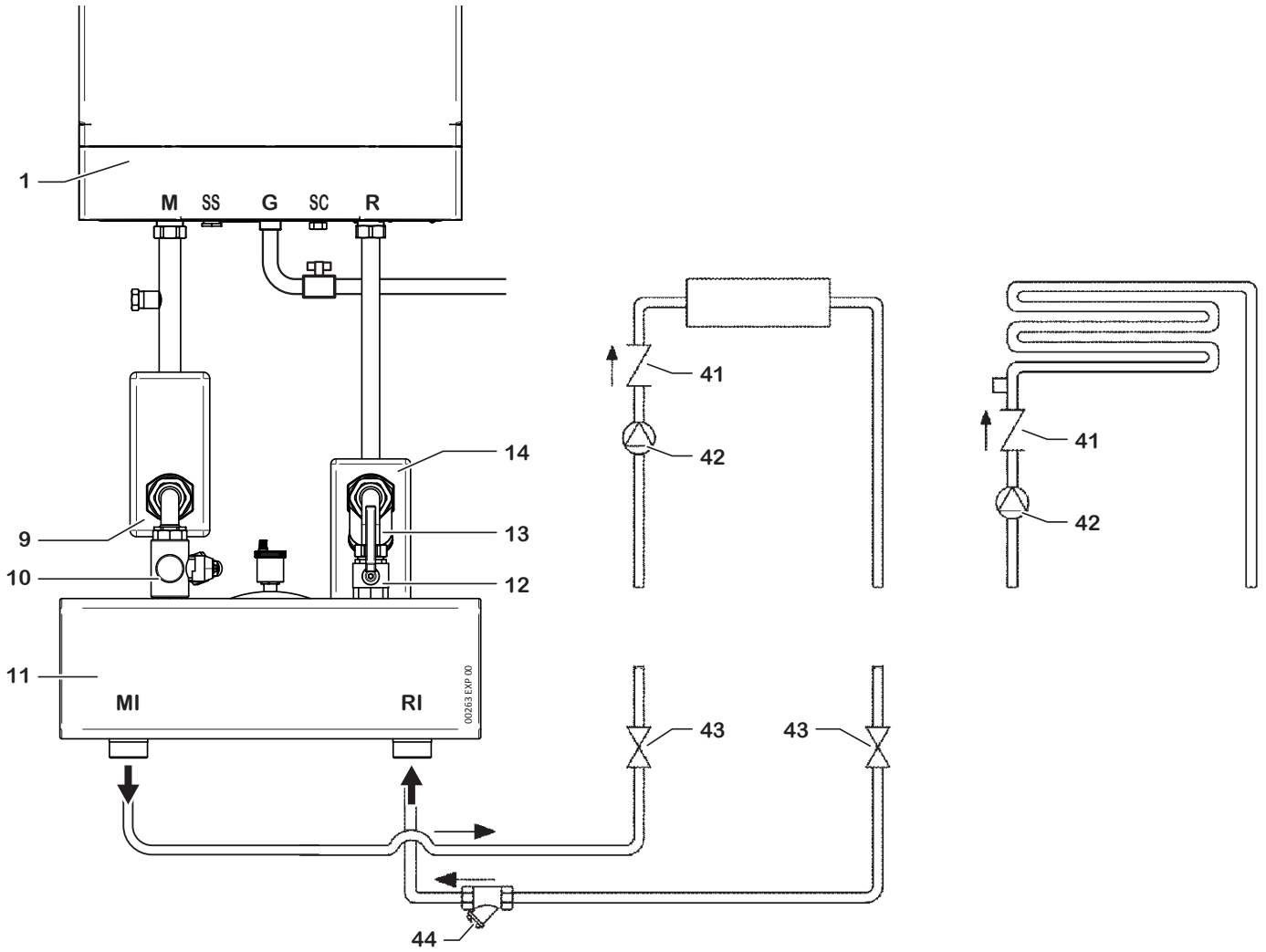

KEY

1 Heat generator

9 Micro bubble separator

10 3-way shut-off delivery valve.

11 Flow balancer

12 Return shut-off valve

13 "Y" filter

14 Micro impurity bubble separator kit

41 Non-return valve

42 Zone circulating pump

43 System shut-off valve

44 System filter

M Thermal module delivery

SS Safety valve discharge

G Thermal module Gas inlet

SC Condensation drain

R Thermal module delivery

MI System delivery

RI System return

Boiler electric diagram:

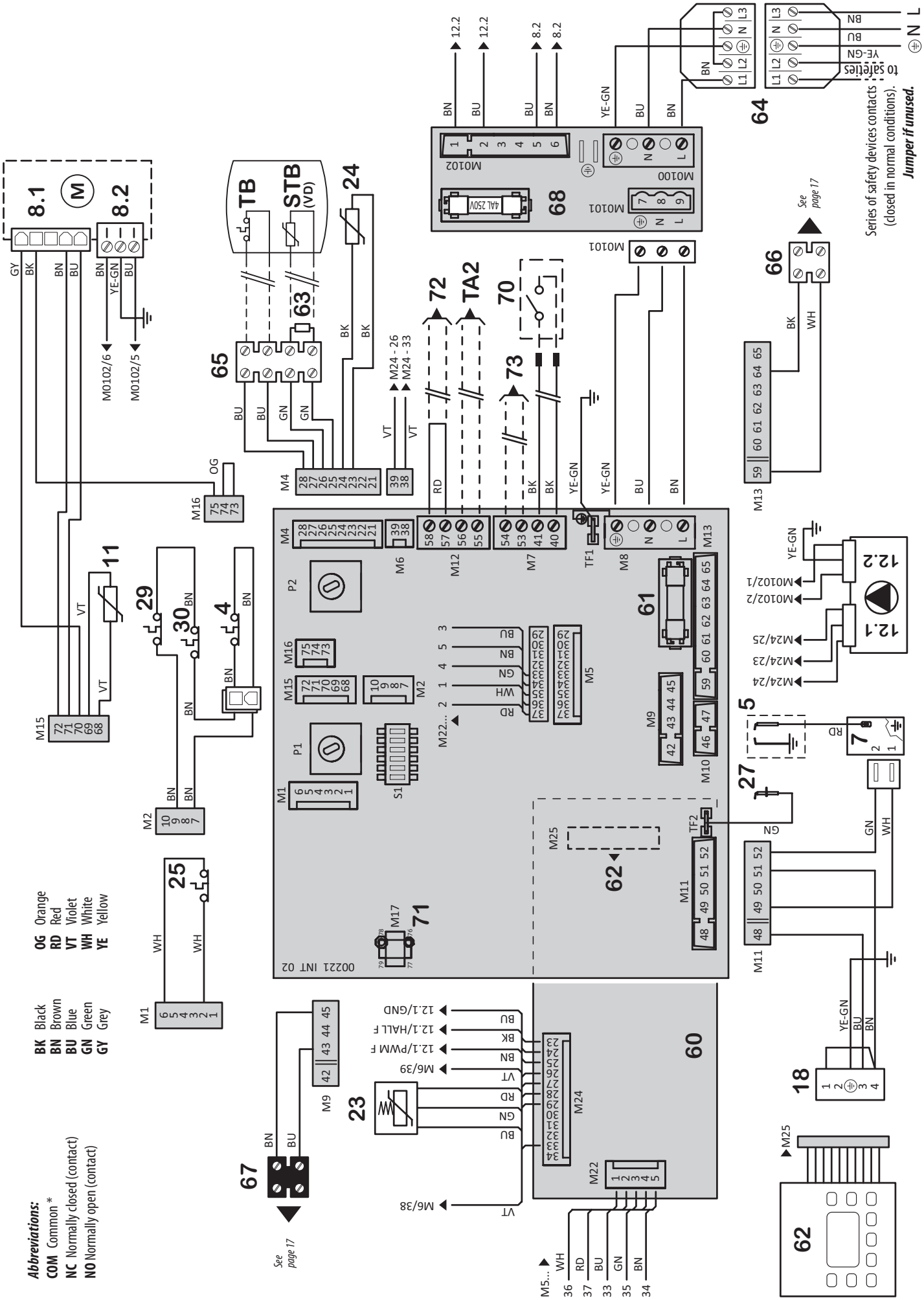

Power supply and safeties electric connections

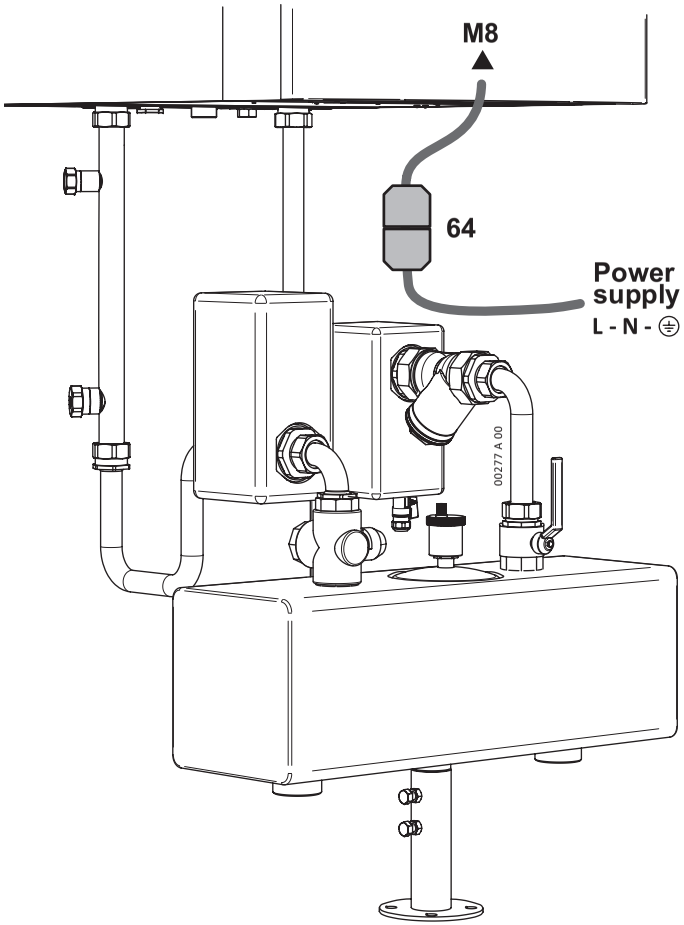

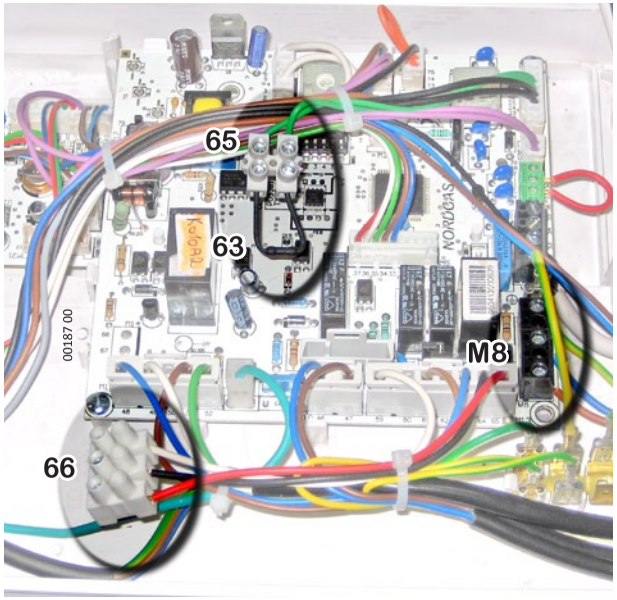

Safeties wiring example

Refer to local/national regulation for the requirements of these devices.
If safety devices are **not** required, **don't forget to jumper terminals L1 and L2 together** in the connector **64** - power supply side (see diagram).

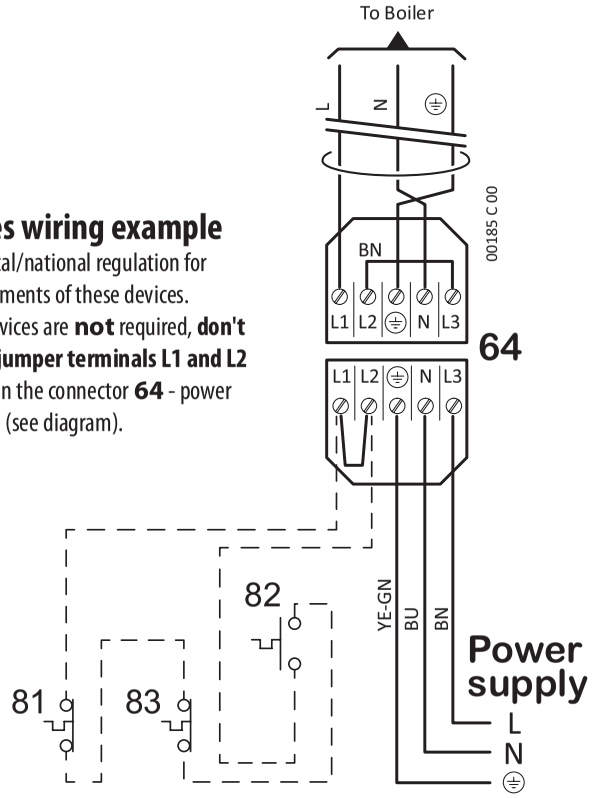

Remark: the contact of the minimum pressure switch **82** *(normally open) is shown in rest condition, i.e. at no system pressure. In conditions of normal operation, the system has the correct pressure and also this contact will be closed.*

Respect L-N polarity of power supply.
Insert an omnipolar switch with contac ing of at least 3 mm.

4 Combustion unit thermal fuse (*)
5 Ignition electrode
7 Discharge igniter
8.1 Motor-driven fan - speed control
8.2 Motor-driven fan - power supply
11 System return temperature probe
12.1 Modulating circulation pump - speed control
12.2 Modulating circulation pump - power supply
18 Gas valve (opening control)
23 System pressure transducer
24 System delivery temperature probe
25 Boiler safety thermostat (delivery) (*)
27 Detection electrode
29 Fume thermal fuse (*)
30 Combustion unit thermostat (manual reset) (*)
60 Display board
61 F2A fuse (quick 2 A)
62 Control keyboard
63 2.2 kOhm - 1/2W (**) resistor. Do not remove - necessary for correct electronic working in this boiler model.
64 Power supply connector through safeties kit (**) (***)
65 Terminal board for resistor 63
66 Terminal board for a device not foreseen on this boiler model (it may not be present)
67 Terminal board for PRR Heating Booster Pump control
68 Electric charges board

External components, optional:

70 **Ambient thermostat:** *Ambient Thermostat or Chronothermostat (available on the market) simple contact in very low SELV safety voltage.*
Closed contact = active request.
Remote control: *terminals of the original remote control device, in compliance with the OPENTHERM protocol. See also page 15.*
To install, remove junction between the two conductors and connect to device terminals (extend if necessary)
71 Preparation for area system kit *with remote control*
72 Preparation for underfloor heating system safety thermostat
73 Preparation for external probe kit
81 System temperature safety block thermostat (*) (**) (•)
82 Minimum pressure switch (*) (**) (•)
83 Maximum pressure switch (*) (**) (•)
TA2 Preparation for differentiated temperature areas ambient thermostat
TB Domestic water storage thermostat (*) (**)
STB Sensor for domestic water storage temperature
PRR Heating Booster Pump *(foresee piloting relays)*
PRS Domestic Water Booster Pump *(foresee piloting relays)*

(*) contacts of these components are shown in rest / cold position.

(**) for details see "Power supply and safeties electric connections" on page 16

(***) the complete (male+female) connector is supplied, to properly connect the boiler to power supply of single or cascade systems

(•) Optional component, that can be required or not according to local or national regulations

BK Black
BN Brown
BU Blue
GN Green
GY Grey
OG Orange
RD Red
VT Violet
WH White
YE Yellow

With Domestic Water Booster Pump (PRS) only

Set parameter **44** to the value **3**

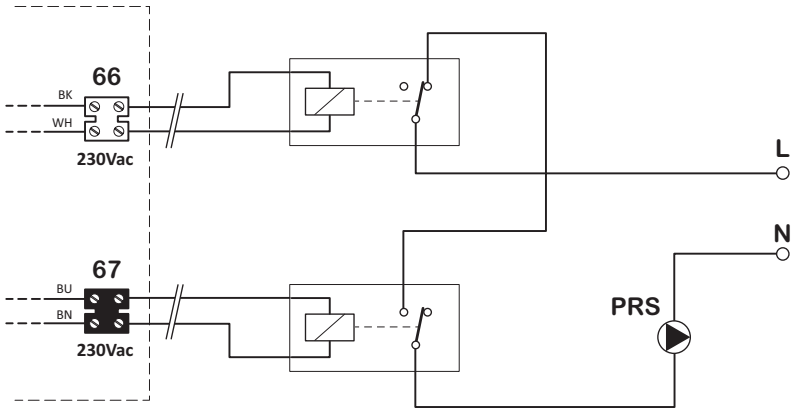

With Heating Booster Pump (PRR) only

Set parameter **44** to value **0 - 1** or **2** according to needs

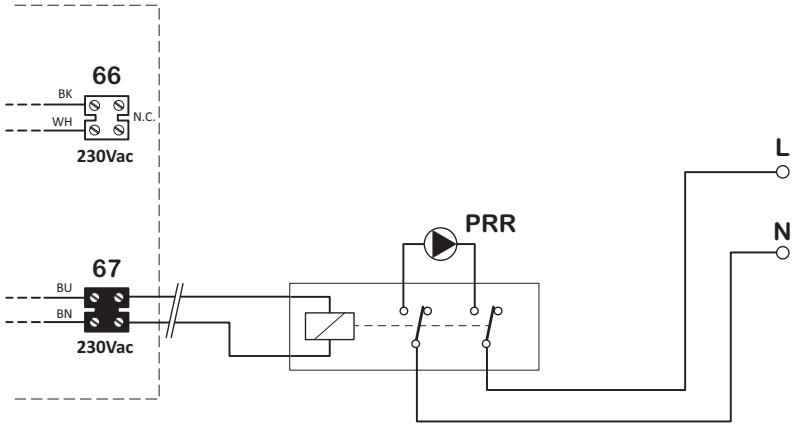

With both Domestic Water (PRS) and Heating Booster Pumps (PRR)

Set parameter **44** to the value **3**

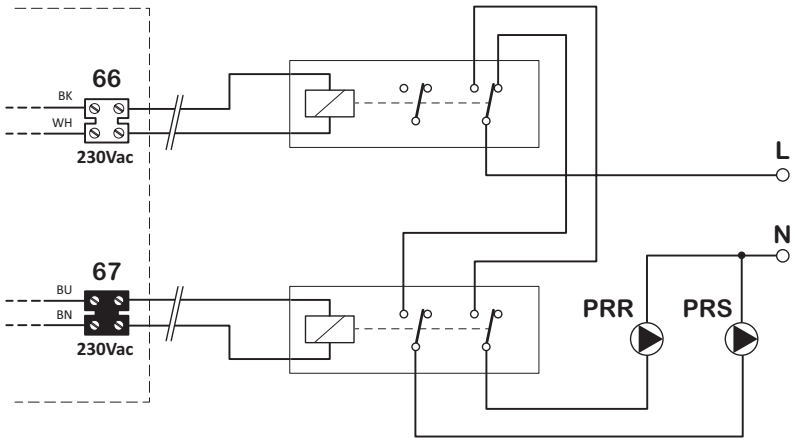

Diagram of flow/head available to system (without accessories)

Diagram of flow/head available to system net of load loss (excluding optional accessories) Note: thermal module circulation pump is modulating, therefore, diagrams show maximum and minimum work limits.

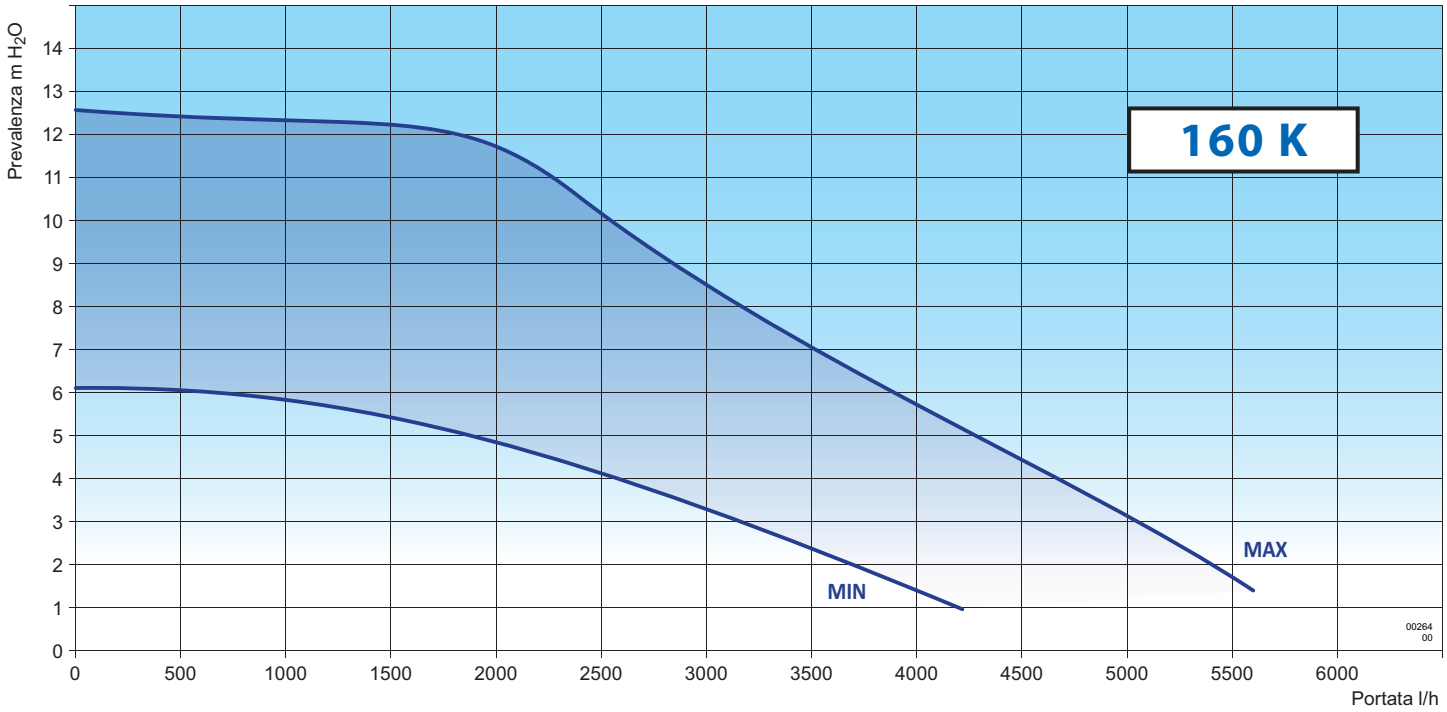

INSTALLER

Electrical connections

Access to electronic board

To access the management board

Cut power to the boiler. Restore power supply only after having closed the dashboard back cover.

▶ Loosen the screws **1** and remove dashboard back cover.

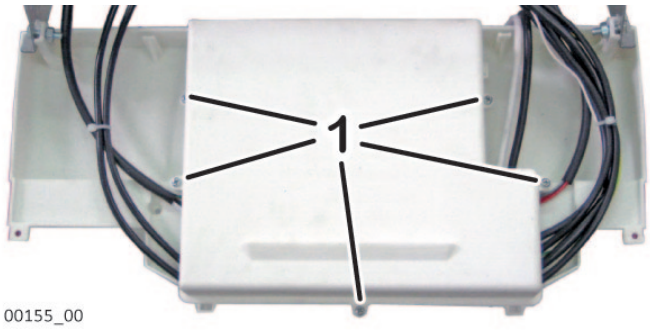

Boiler electric connections

The ambient thermostat connection works at a very low safety voltage (SELV): connect it to terminals with no potential (clean contact) of a thermostat or chronothermostat. **It does NOT have to be connected to live circuits.**

In order to avoid malfunctions caused by disturbances, low voltage connections (e.g. ambient thermostat or chronothermostat available on the market) must be kept separated from power supply system cables, e.g. letting them flow through separate sheaths.

Connect device to a network of 220÷240 V-50 Hz. In any case, power supply voltage must be between -15% ... +10% compared to device rated voltage (230 V); otherwise malfunctionings or failures may occur. It is necessary to respect L-N polarity (phase L=brown; neutral N=blue) - otherwise boiler does not work - and ground connection (yellow-green cable).

IT IS COMPULSORY to place upstream of the device a BIPOLAR SWITCH in compliance with the regulations in force. The installation must be carried out in compliance with the regulations in force and according to state-of-the-art standards.

For general supply of the device from the electric network, it is necessary to use a bipolar switch, and adapters, multiple plugs and extension cables may not be used.

In case of supply cable replacement, use one of the following cables: H05VVF or H05-VVH2-F.

The replacement of the power supply cable, must be carried out by qualified personnel.

Ground connection according to the IEC regulations in force is compulsory. In order to replace the cable, open the dashboard cover, remove if from the cable holder and disconnect it from terminals. Proceed in reversed order and direction to install the new cable. When connecting the cable to the boiler, it is necessary:

- that the earth wire is 2 cm longer than the other conductors (Phase, Neutral);
- to secure the cable upstream of the terminals using suitable blocking devices.

The equipment is electrically safe only when it is correctly connected to an efficient ground system carried out in accordance with current safety regulations. Have qualified personnel check that the wiring is suitable for the maximum power absorption of the equipment, as indicated in the technical plate, making sure in particular that the diameter of cables is sufficient for the equipment's power absorption.

ITALTHERM declines any responsibility for damages to persons, animals or things arising from the missing ground connection of the boiler and of the failure to follow regulations.

Connection to eventual external safety devices

External safety devices (e.g. minimum/maximum pressure switches; limit thermostat) can be required by the local and/or national regulations. They should be of normally closed type (contact closed in normal conditions and open in anomalous conditions) and they should be connected in series to the power supply, as in "Power supply and safeties electric connections" on page 16, so in case of triggering (e.g. temperature or system pressure not within the limits of the components) they interrupt the electric supply to the boiler.

Electric connection between boiler and boiler unit

Do not connect terminals for boiler unit to electric power supply or to live cables. As shown in "Boiler electric diagram:" on page 15, boiler has 2 different inputs for electric connection to boiler unit:

TB: input for *boiler thermostat* or *solar domestic water request*: when contact is closed, boiler operation is forced in heating of the domestic water storage until opening (or until boiler maximum temperature is reached). To use in case of boiler provided with temperature thermostatic control (also manually adjustable) or in combination with solar heating system, in order for this one to control domestic water storage heating when solar energy in insufficient.

STB: input for *boiler storage temperature probe*: boiler reads boiler temperature and, when necessary, switches to domestic water storage heating in order to keep its temperature approximately at the set value**.** Even in case the boiler unit was NOT supplied by ITALTHERM, it is necessary **to use the optional original boiler probe kit** (NTC R=10 kOhm at 25°C, ß=3435). Only **if you intend to use** the STB terminal, it is necessary **to remove the resistor** installed in the factory, which **otherwise must be left installed**.

The connection cable between the STB probe and the boiler must be kept in a raceway which is separate from those which contain electric power supply cables.

In any case, maximum distance which can be reached through the 2 x 0.5 sq. mm cable is 30 m.

Note: *if both inputs were used,* ***TB functionally takes precedence on STB***.

INSTALLER

External Probe Kit

Installation and setting

The External Probe automatically manages the system delivery temperature according to the external temperature, so that the user does not have to adjust it manually. This function is also defined *"sliding temperature"*.

** *i.e. heating elements temperature. This adjustment does not have to be confused with ambient temperature (settable on ambient thermostat or on remote control, but not on boiler) which does not depend from the first one.*

Installation must be carried out by a qualified technician following the instructions supplied with the kit. For connection to management board see "Boiler electric diagram:" on page 15.

After having installed the external Probe, keys **+.III°** and **−.III°** described in the User Section will not allow setting the delivery temperature any more, but the dispersion coefficient ***"kd"***, e.g. the influence that the external temperature, detected by the probe, will have on the system delivery temperature, as shown in the following diagram.

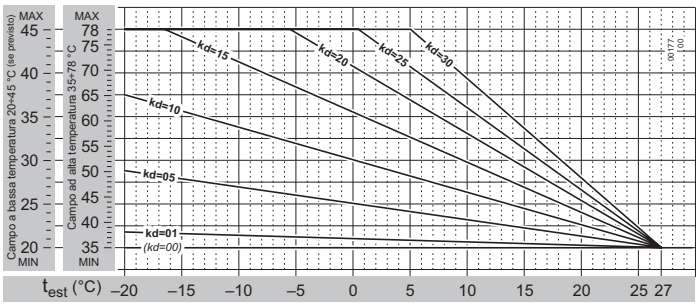

The *kd* value must be adjusted according to the estimated quality of the property thermal insulation. Its range of adjustment will be from 01 to 30: the **highest values** are used when there is a **high thermal dispersion** and therefore a **less efficient insulation** (and vice versa).

(i) Given the great variety of property types, it is not possible to give precise indications on the ***kd*** value to set. **A correct adjustment will have to be evaluated case by case and will result in best comfort in all weather conditions** which require heating, i.e. a quick achievement of ambient temperature at cold climate conditions and absence of overheating at mild climate.

External Probe Kit with optional Remote Control

If also the Remote Control Kit is installed, please refer to the relevant instruction handbook for details about the combined working of Outdoor Sensor and Remote Control itself.

Remote Control Kit

This remote control **is more than a simple room thermostat**. Thanks to this, it is possible to **manage the boiler in all its settings** like DHW and CH temperature adjustment, **boiler reset** in case of boiler block, and of course it works as a **room thermostat** both in **manual** and **weekly program mode**. It's powered by the boiler (in safety low voltage), so **it doesn't need batteries.**

(i) Remove Remote Control from its box and **keep relevant instructions for use. Attach them to this instruction booklet.**

⚠ **Neither the Remote Control nor the relevant cable coming from the boiler must be connected to the 230 V power supply, for no reason.**

(i) In order to avoid malfunctions caused by disturbances, Remote Control connections and other possible low voltage connections must be kept separated from power supply system cables, e.g. letting them pass through separate sheaths.
Cable maximum length must be less than 50 m.

1. Make sure that boiler is not electrically powered;
2. install device as described in **paragraph 1** of the booklet supplied with the Kit;
3. connect Remote Control connections **"OT" nr. 1-2** to the "TA - Room Thermostat - Remote Control" cable coming from the boiler using a suitable bipolar terminal. See also "Boiler electric diagram:" on page 15;

Note: *Remote Control connection has no polarity.*

4. power supply the boiler and select the **Summer** mode;
5. check the correct work of the device. The electronics should recognize it automatically.

(i) **Hereafter, the boiler should be left on Summer mode; the boiler work is managed by the Remote Control, including the OFF, Summer and Winter modes, and the technical functions (such as several additional functions).**

In case of problems in wirings or in boiler setting, the alarm E31 will appear. See E31 alarm description on page 31.

Green Heating Technology ITALTHERM

Suggestions on Water Characteristics of the system

Filling the heating system is a very delicate operation which shall not be underestimated, whether only the heat generator is changed or a new installation is made.
Wrong evaluation of system water characteristics can cause, under certain circumstances, damage to both system and heat generator.

A heating system is almost never perfectly sealed; some water leaks or oxygen infiltrations may occur. As explained below, both these phenomena are harmful.

Some of the parameters which may affect the heating system life are:

The simultaneous presence of metals with different electrochemical potential (copper, brass, steel, and sometimes also aluminium) that, in an aqueous environment, lead to galvanic corrosion.

The presence of free oxygen, usually due to air seepage close to connectors or seals, is a typical corrosive agent, mainly active within a temperature range of 50 to 70° C.

Water leaks, requiring frequent topping-ups, can have both a corrosive and scaling effect, depending on the type of water available for topping up. In all cases, leaks (and corresponding topping-ups) should be kept under control, mainly when an automatic filling system is installed on the boiler. Under these circumstances the installation of a counter indicating the quantity of topped-up water is strongly recommended.

Natural impurities or impurities added to water:
Drinking water may often contain even high concentrations of chlorides and sulphates which can increase speed of corrosion on metal surfaces. Other undesirable components could have been fed into the system before or during installation, such as building materials, metal shavings, sawdust, grease, deposits, and dirt. Welding/soldering residues can also cause corrosion, both on new systems and in case of replacing or repairing. Older systems, designed to operate with radiators and equipped with large diameter pipes, contain a great deal of water, favouring the formation of sludge and deposits.

Sludge and incrustation
The presence of black deposits (magnetite) indicates that the corrosion is limited. Nevertheless, the high specific weight of this oxide can create clogging difficult to remove, especially in the hottest areas. Scale is caused by water hardness, namely to the presence of calcium and magnesium salts. Calcium, as carbonate, precipitates on the hottest zones of the system. Magnetite often favours scale. While red iron oxide Fe_2O_3 indicates oxygen corrosion.

Frequent leaks
In case of frequent leaks, hydrogen and/or air accumulate in the upper section of the exchanger and radiators, thus preventing a complete heat exchange. When the electrolytic corrosion process starts, the system water level is reduced, gases accumulate in the upper section of the heat exchanger and radiators. The presence of air is caused by the fact that the system may not be perfectly sealed. A slow system pressure drop due to a leak is often difficult to trace, especially when the leak is small - usually, during the wintertime, leaks from radiator valves may be dried by the heat produced by the radiator or boiler. These tiny leaks, however, allow air to enter the system. The main points which can originate small leaks are located close to joints and, in particular, on the circulating pump suction side (air purging valves, O-rings, filling valves). In these cases, to prevent any damage, it is necessary to protect the system with a suitable corrosion inhibitor.

System checks

For correct system operation, make sure of the following:

1) the system shows no leaks, or at least the most evident leaks are eliminated;
2) in case an automatic filling system is installed, also a litre counter shall be fitted in order to know the exact entity of any possible leak;
3) system filling and topping up are carried out with softened water in order to reduce the total hardness value. Water shall be also conditioned in order to keep the pH value within the prescribed limits so as to avoid any corrosion (see table below).
4) A new or replaced system shall be equipped with efficient devices for the elimination of air and of any impurity such as Y filters, micro-impurities separators and micro-air bubbles separators;
5) Avoid draining system water during ordinary servicing operations, even if the quantities seem to be insignificant. For filter cleaning, for example, equip the system with the special shut-off valves;
6) Before opening the connection between a new generator and the system, always check system water in order to define if water parameters indicate the need to fully drain the system, to use the water already circulating inside the system or to chemically wash the system using mains water with a detergent whenever the system could be dirty or clogged, and to the consequent filling of new treated water.

If tests of a sample of water used to fill the system shows the following values, it means that everything is OK. If, on the other hand, the values differ, a corrosion inhibitor shall be used.
$9.6 < pH < 10.5$
$Ca^{++} + Mg^{++}$: <0.5°f
$OH + 1/2\ CO_3$: from 5 to 15°f
P_2O_5 : from 10 to 30 mg/l
Na_2SO_3: from 20 to 50 mg/l
If system water is in contact with aluminium, the required pH value is <8.5.

Filling the condensation collecting syphon

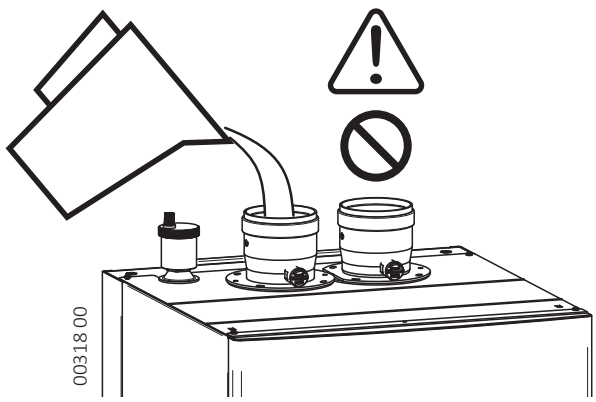

During First installation of boiler or after long inactivity periods, **fill the condense trap by pouring water** (about 1/2 litre) in the **flue OUTLET**, as shown in the picture.

Beware NOT to pour water in the inlet connection!

INSTALLER

Water treatment for domestic heating systems UNI 8065 Standard

WHEN should water be treated in domestic heating systems?

ALWAYS, when changing generators in existing systems, on new systems (NEW SYSTEM and NEW GENERATOR).

UNI 8065 standards states that:

"during the design phase, based on raw water characteristics, all the treatment systems and chemical treatments necessary to obtain water having the characteristics set forth in 6.1.4 shall be envisaged".

Aspect:	possibly clear.
pH:	above 7 (with aluminium or light alloy element radiators, pH value should also be below 8).
Conditioners:	in the concentrations specified by the supplier.
Iron (as Fe)	< 0.5 mg/kg (higher iron values are due to corrosion and must be eliminated).
Copper (as Cu)	< 0.1mg/kg (higher copper values are due to corrosion and must be eliminated).

It is necessary to treat water in domestic heating systems for the following reasons:

– To PRESERVE the system in time

- To OPTIMIZE its efficiency;

– To ENSURE regular operation of the auxiliary equipment

If the water properties are not known, the following typical problems are are very likely to occur:

1. **INCRUSTATION**
   1°fr = 10mg/kg $CaCO_3$ 30° fr = 300 mg/kg $CaCO_3$
   In systems containing 1,000 litres of water the $CaCO_3$ content is 300 gr that, if not adequately treated, will deposit onto the exchanger surface.
2. **CORROSION**
   Corrosion is generally favoured by the presence of oxygen, by the contact between different metals, or by the presence of chlorides.
3. **DEPOSITS**
   These are insoluble organic and inorganic substances: SLUDGE, PROCESSING RESIDUES.

The water in domestic heating systems should be treated in the following ways:

– To define the suitable treatment, it is necessary to analyse system and filling water.

"the standard specifies that as regards domestic hot water no treatment should be used that could make it undrinkable, if necessary, relative to the toxicological and microbiological parameters envisaged by the legislation in force…".
"This standard also considers that water destined to domestic heating systems, before treatment, has features which are similar to drinkable water".

- Treatments for filling and/or re-circulation water of heating systems are classified as follows:
- Physical and chemical-physical (also called "external") treatments, such as filtration and softening;
- Chemical (also called "internal ") treatments such as hardness stabilisation, deposits dispersion, deoxygenation, pH correction, formation of protective films, biological growths control, antifreeze.

The type of treatment shall be chosen on the basis of the characteristics of the system water to be treated, the type of system and the purity limits required.

ALL DOMESTIC HEATING SYSTEMS SHOULD PROVIDE FOR WATER TREATMENT

Systems with power <350 kW:

- Safety filter;
- If total hardness is < 35° fr, softening can be replaced by a suitable chemical conditioning.
- Systems with power > 350 kW:
- Safety filter;

If total hardness is > 15° fr, a softener shall be used to restore the hardness value within the limits specified in paragraph 6.1.3 (< 15° fr).

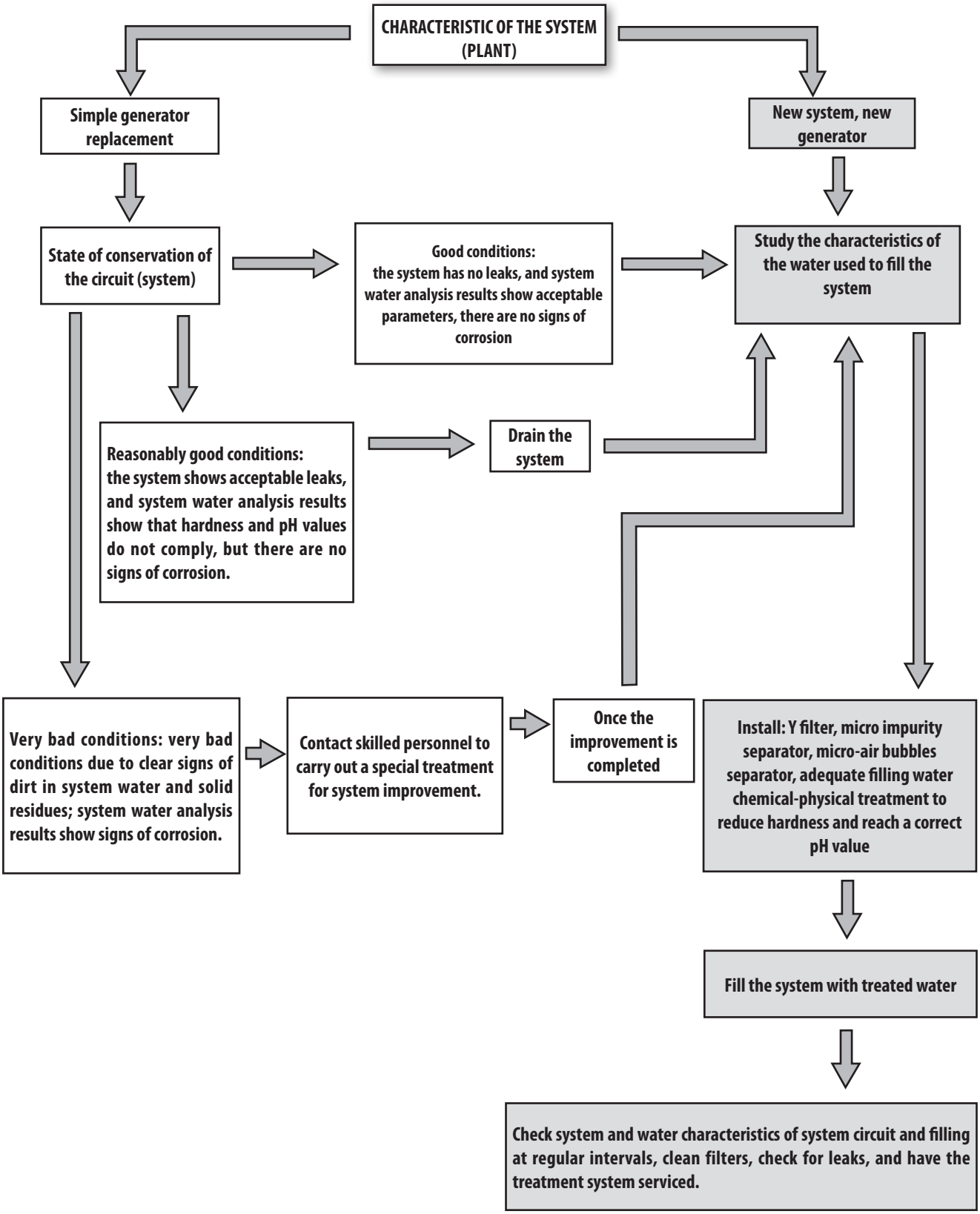
CHARACTERISTIC OF THE SYSTEM (PLANT)
Simple generator replacement
New system, new generator
State of conservation of the circuit (system)
Good conditions: the system has no leaks, and system water analysis results show acceptable parameters, there are no signs of corrosion
Study the characteristics of the water used to fill the system
Reasonably good conditions: the system shows acceptable leaks, and system water analysis results show that hardness and pH values do not comply, but there are no signs of corrosion.
Drain the system
Very bad conditions: very bad conditions due to clear signs of dirt in system water and solid residues; system water analysis results show signs of corrosion.
Contact skilled personnel to carry out a special treatment for system improvement.
Once the improvement is completed
Install: Y filter, micro impurity separator, micro-air bubbles separator, adequate filling water chemical-physical treatment to reduce hardness and reach a correct pH value
Fill the system with treated water
Check system and water characteristics of system circuit and filling at regular intervals, clean filters, check for leaks, and have the treatment system serviced.

Accessories to Be Installed on the System

Before switching the boiler on, let water circulate (with boiler off) for at least 2 hours in order to eliminate any impurity from the system through the micro-air bubbles separator and micro impurity separator. During this last phase, open the drain cock fitted onto the micro impurity separator at regular intervals, so as to eliminate any deposit. (Repeat this operation also during the first heating phase).

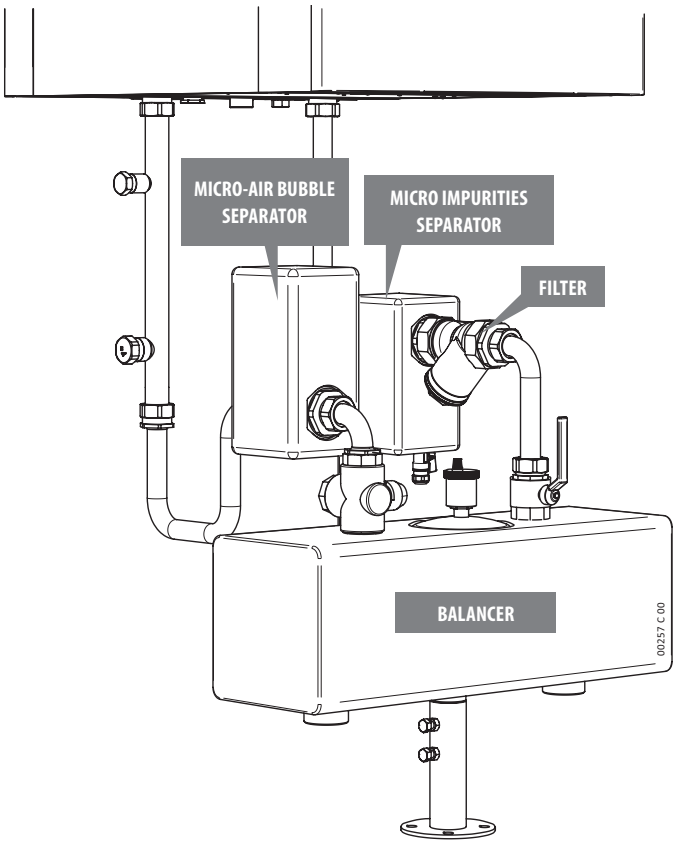

As an alternative to these parts, it is also possible to make use of plate exchangers, having the characteristics required by the system currently in use. It is always necessary, in any case, to install at least one system for micro-air bubble separation on the exchanger boiler delivery side. System filling water must always be treated as described above.

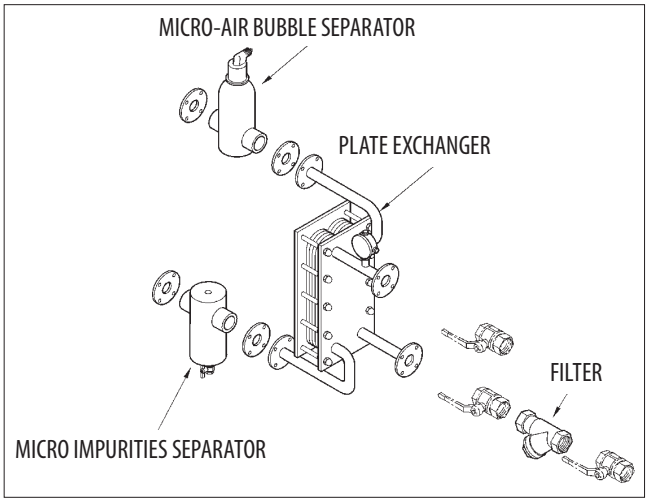

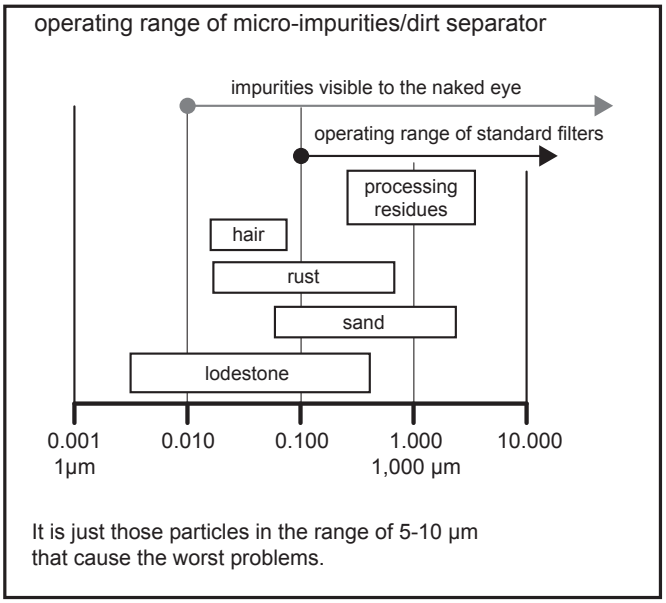

BENEFITS

- Impurity discharge while the system is working.
- There is no need to install check valves or bypass circuits.
- No obstructions, no load losses.
- Also microscopic particles (up to 5 µm) are filtered.
- Servicing in just 5 seconds.

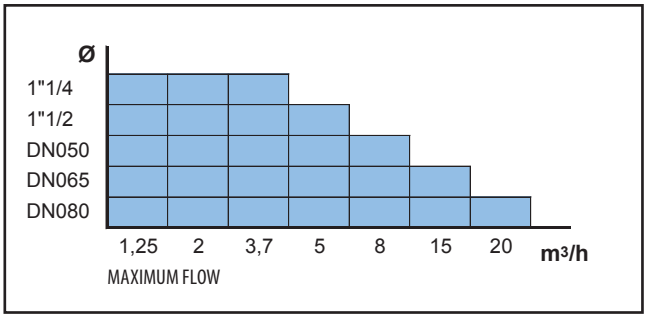

IMPURITY SEPARATORS

1. Define the diameter in the assembling point
2. Define flow in the assembling point (cu.m/h)
3. See the table to define the suitable model

Circulating pump recommendations

Before switching on the boiler, **make sure that the circulating pump is not blocked** due to inactivity: in the middle of the cap there is a hole (should there be a cap, remove it) that gives access to the rotor shaft; **push and turn it using a suitable tool**, usually a "Phillips" screwdriver.

Filling the Water Circuit

Once all system connections have been made, the circuit can be filled. For perfect boiler filling, this operation should be carried out with extreme care, strictly following these steps:
- open radiator air purging valves;
- open heating system filling valve, and wait for all the air to be bled out of the radiators;
- make sure that boiler automatic air purging valve works properly;
- close radiator valves as soon as water starts to come out;
- check, on the system water gauge, that the cold pressure reaches a value between 1.5 and 2.0 bar; then close the filling cock;
- To eliminate all the air from the thermal module, before igniting the burner we recommend turning the switch to "winter". Close the gas cock and perform the ignition procedure to start the circulating pump. As soon as the boiler is blocked (2-02) with the circulating pump working, wait for the pressure value read on the water gauge to become steady and, if needed, open filling cock to take pressure back to the required value.

To ensure correct operation, the value of water pressure inside the boiler read on the water gauge with the hot circuit shall be about 1.0 ÷ 1.5 bar. If, while the boiler is running, this pressure value severely drops below the specified value, the user will have to restore the original value using the filling device.

Repeated pressure drops (and subsequent restore processes) indicate a possible system leakage.

GAS conversion

ATTENTION: operations described below must be carried out exclusively by qualified personnel.

Refer to boiler manufacturer for components supply for gas change.

In case of operation with Commercial Propane G31, installation of a suitable pressure reducer upstream of the boiler is absolutely necessary.

This boiler is designed to be fuelled with natural gas G20 (Methane) or Commercial Propane G31. It can be transformed by a qualified technician in order to function with one of these gas types.

Butan Gas G30 shall never be used *(Butan Gas G30 is usually contained in transportable cylinders for cooking tops).* **It is therefore important to make sure of this with the gas supplier.**

1. Enter the technical menu (see "Boiler main parameters (PC)" on page 27) and set parameter **O1** to the corresponding value to the available gas type.
   - **0** for **Methane (G20)**,
   - **1** for **Propane (G31)**
2. cut boiler power supply off;
3. install gas transformation kit following the instructions provided with it;
4. it is therefore **always** necessary to verify correct combustion (see "Combustion control and adjustment" on page 28) and general boiler operation.

Condensation neutralisation filter Kit

Operation

Acid condensation, conveyed into the neutralization filter, follows a pre-set path for two steps. The first step consists in the filtering of nitrates and sulphates by activated charcoal inside the first section of the pipe, while the second step is to increase the pH value. Condensation acidity can be checked with litmus paper used to define pH value.

SERVICING

With reference to law no. 141 dated May 29,1976 and Italian Legislative Decree no.152 dated May 11, 1999, pH parameters should be between <5.5 and 9.5>.

every six months

pH definition:

dip a litmus paper (or suitable digital instrument) into the condensation close to the exhaust connector for 2 seconds approximately, then place it on a white sheet of paper. After about 30 seconds compare it with the colour scale. (The neutral point is at 6.8 - 7; if the reading is below this value, the condensation is acid, while if it is higher, the condensation is basic. The pH value of the non-treated condensation can be defined dipping the litmus paper inside the conveyor pipe containing activated charcoal.

once a year

Reagent:

measure the pH values and, if needed, replace the reagent granulate (refer to six-monthly servicing).

Drain all the liquid off the neutralization box. Remove the exhaust connector, and remove the pipe. Empty the box completely, and thoroughly wash it, also on the inside. Insert the spacer and mesh with the activated charcoal pipe, then lay the pad. Fill it with reagent, and insert the activated charcoal. Connect the pipe again (with the seal on the outside), and tighten the connector by hand.

Disposal of material:

Used reagent does not contain any toxic substances and can therefore be disposed of with urban waste.

The activated charcoal filters can be disposed of as urban waste, i.e. incinerated in waste treatment plants.

INSTALLER

Separate system (C_{43} , C_{53} , C_{63} , C_{83} , C_{93} *)

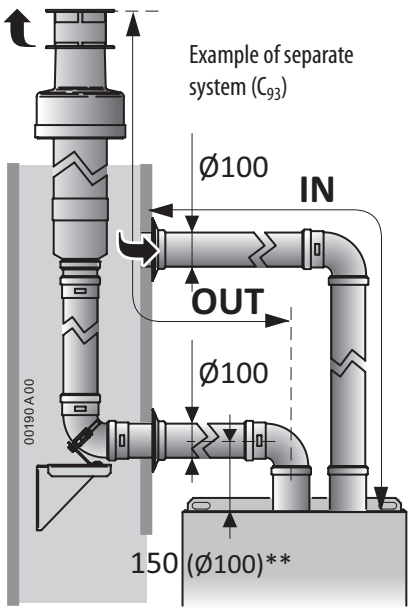

Mod.	Separate system Ø100 mm original***	
	IN+OUT min÷max (m)	OUT max (m)
160 K	2 ÷ 20	19

* ***Note:*** *With the separate system it is possible to create also systems of type C_{13} and C_{33}.*

** *Duct axis measurements are referred to the boiler upper profile and immediately to the entry of the first right-angle curve Differences in levels due to slopes are not considered.*

*** ***IMPORTANT:*** *table is referred to original flue fitting accessories. When using **NON-original** flue fitting accessories (certified for condensation, the use of which is allowed by the special approval of C6 boilers) refer to the relevant technical documentation.*

System with suction from room (B_{23P})

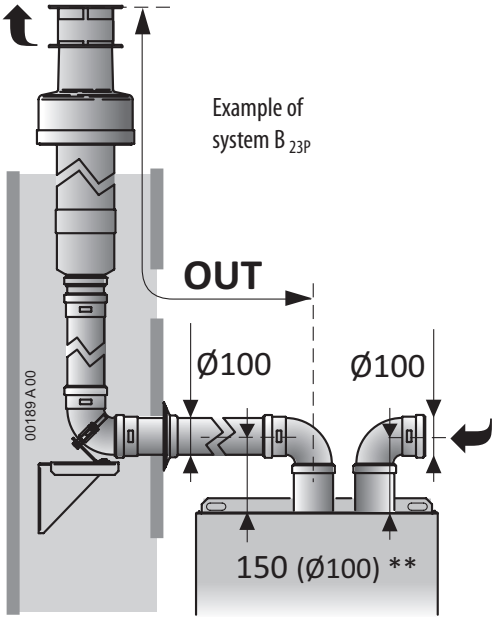

Mod.	System B23P Ø100 mm original***
	OUT max (m)
160 K	1 ÷ 19

Coaxial system (C_{13} , C_{33})

Mod.	Coaxial system Ø100/150 mm original***	
	Horizontal (THL) max (m)	Vertical (TVL) max (m)
160 K	5	6

THL *Total Horizontal Length*

TVL *Total Vertical Length*

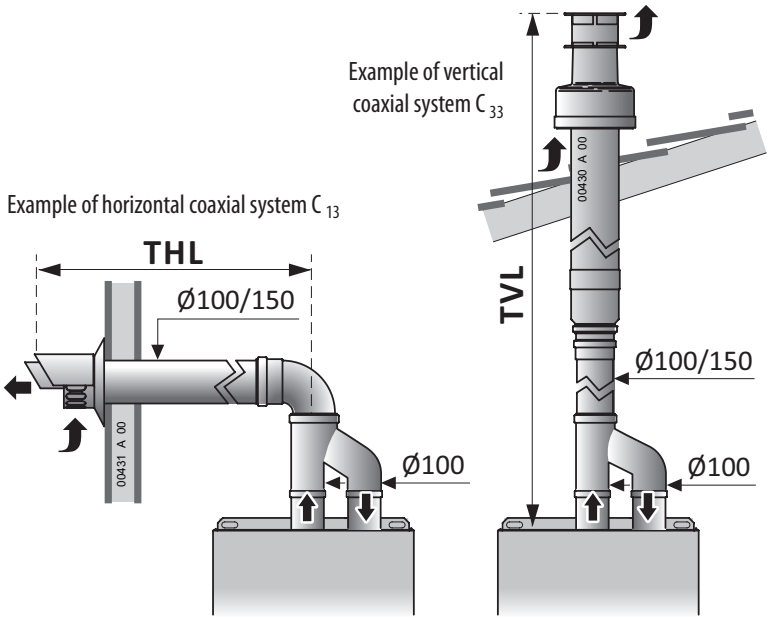

Boiler parameter setting (technical menu)

Boiler parameter setting is to be carried out by technical personnel only. The technical menu is accessible through a specific key combination on the control panel of the technician. Some parameters are necessary to adjust and optimize the standard boiler operation, others are necessary to force a specific action during servicing operations.
On the display, the number of the selected parameter is shown by the numeric indicator in the left, usually under the symbol . All parameters have a value, adjustable within a certain range depending on the parameter itself and shown by the numeric indicator on the right (usually under the symbol) or by the one located at the bottom in the middle.

In case of management board replacement, verify and restore all parameters. Do not modify factory settings if it is not necessary.

Boiler main parameters (PC)

Parameters described in this table include only the main ones and/or those mentioned in this booklet. The complete parameter list is contained in the documentation for the technician.

Parameter	Range of adjustment *(factory setting)*	Description
01	0-1 (*)	Gas power supply type **Value 0** = **Methane (G20)** operation **Value 1** = **Commercial Propane (G31)** operation ***NOTE*** *(*): Factory setting depends on the gas type factory preparation* **For gas transformation it is necessary to use the suitable transformation kit and carry out the complete procedure described in the relevant instructions.**
03	—	It expresses the power percentage that the boiler will provide in the phase of slow ignition. **It is advisable not to modify factory settings**
04	0…99 *(99)*	It expresses the power percentage that the boiler will provide during heating, in comparison to the maximum rated power supplied in domestic water phase (determined by the gas valve MAX adjustment). For use see paragraph "Heating max. power adjustment" on page 29.
12	0-1 *(0)*	Burner ignition, in non-modulated way, for combustion check. For details see paragraph "Combustion control and adjustment" on page 28. **Value 0** = ignition at **minimum** power **Value 1** = ignition at **maximum** power Note: During this phase, there is no ignition delay. Therefore there might be cases in which burner quickly turns off and then again on.
13	—	Fan min. speed in heating mode (rpm x 100). **Do not modify factory setting** Range and value depend on the model of the boiler.
14	—	Fan max. speed in heating mode (rpm x 100). **Do not modify factory setting** Range and value depend on the model of the boiler.
15	15…60 *(30)*	Pre-ventilation time Immediately before boiler ignition, combustion chamber is pre-ventilated with air only, for a time sufficient to eliminate any possible residue resulting from previous combustion and therefore facilitate burner adjustment. **Factory setting is ideal for most cases and it is advisable not to modify it.** Note that boiler ignites burner only after pre-ventilation is concluded. Therefore, increasing pre-ventilation time means delaying boiler response to heat requests (e.g., the time you have to wait before hot water comes out when you open cock).
16	10…60 *(20)*	Post-ventilation time Immediately after boiler switching off, combustion chamber is post-ventilated with air only for a time sufficient to eliminate any possible residue resulting from previous combustion. This operation eliminates most burnt gases and enables next pre-ventilation (controlled with parameter **15**) to be as quick as possible. **Factory setting is ideal for most cases and it is advisable not to modify it.** Post-ventilation is interrupted in case of heat request, so this time does not delay boiler response.
17	20…78 Area 1 temperature: high: *(45)* low: *(78)*	TA2 inlet setting (delivery temperature setting with request of the Secondary Ambient Thermostat only) *Boiler can manage a secondary ambient thermostat installed in an area which has to be heated differently to the one in which the main ambient thermostat is installed (or optional Remote Control). For example (with appropriate hydraulic-system measures to convey heating to various areas) we can foresee a heated area with low temperature systems (e.g. the main one, controlled by the main ambient thermostat or by the optional Remote Control) and one with radiator systems (e.g. controlled by the TA2 secondary ambient thermostat). The advantage of this management is that when there is a heat request from the low temperature system only, boiler can work at low temperature and therefore work in condensation with all related advantages. This parameter accessible to the technician regulates system temperature for the secondary area (controlled by TA2) which can be with radiators or at low temperature and therefore the range of adjustment covers both possibilities (20÷78°C). The user cannot adjust delivery temperature in the area covered by TA2 (it can of course adjust ambient temperature desired in the secondary area, by operating on the TA2 itself).*

Parameter	Range of adjustment *(factory setting)*	Description
18	0…1 *(0)*	Fan current speed display. By setting value to **1** and exiting the Technical Menu, the display will show, for 15 minutes, the fan rotation speed (rpm x 100) effectively measured by a device incorporated in the fan motor. Use this information for the diagnosis of any possible malfunctions. Use this function during boiler operation, WITHOUT setting it to stand-by.

Combustion control and adjustment

Before checking combustion (except in case of first ignition), clean burner and exchanger.

For check (and, if necessary, for adjustment) a **correctly calibrated fume analyser** is needed (in condensation boilers measurement precision and correctness is particularly important). Therefore, through a dashboard function, we will ignite burner at low flow first and then at maximum flow and we will carry out measurements and adjustments in both conditions. Proceed as follows:

1. Boiler must be electrically powered and it must be set to **OFF**. Operate, if necessary, on key (OFF shown on the display, at the bottom);
2. On the fume exhaust connector, unscrew fume analysis connection point screw, insert the analyser probe in the fume analysis connection point, ensuring connection waterproofness;

Note: *Sensor located at the top of the probe should be located in a position as centred as possible of the exhaust flow: it is advisable to fully insert probe and then extract it by ca. 4 cm. Insert probe so that the probe protection bow, located at the top, is transversally located (the flow must flow through it and directly reach probe).*

Activate ambient Thermostat to generate a heat request and make sure that the heat produced byu the boiler can be dissolved by radiators (and/or radiating panels / underfloor heating systems).

3. activate boiler **at minimum non-modulated power**, entering the technical menu and using the "Chimneysweeper" function which can be activated selecting parameter **12** and setting value **0** (see "Boiler parameter setting (technical menu)" on page 27): burner ignites at low flow.
4. referring to the following table, verify that the numerical indicator at the bottom, in the middle of the display, shows the correct value for the **rpm at Qr** for the **type of gas used*** *(you are measuring fan rpm x 100 at low flow, for example, value 14 means that fan turns at 1400 rpm);*

Flow		Natural gas (G20)		Commercial propane G31	
		CO2 %	Fan rpm	CO2 %	Fan rpm
160 K	Reduced Qr	9.0 ±0.5	1500	9.6 ±0.5	1500
	Rated Qn	9.3 ±0.5	7400	10.2 ±0.5	7200

5. wait until boiler reaches normal conditions (ca. 5 minutes). If the **CO_2** value of fumes at a **Qr** low flow for the **type of used gas** is included in the interval shown in the table, go to point **6** for check / adjustment at rated flow, otherwise CO_2 must be brought back into correct values, modifying the off-set by turning the screw. **1**. **ATTENTION: turn screw by 1/8-turn at a time and wait 1 minute** to let the value of CO_2 measured by the analyser stabilise;
   - if the **CO_2** value is **HIGHER** than allowed, **DECREASE** off-set by turning the screw **1 COUNTERCLOCKWISE**;
   - if the **CO_2** value is **LOWER** than allowed, **INCREASE** off-set by turning the screw **1 CLOCKWISE**;
6. without exiting the technical menu, activate boiler at **maximum non-modulated power**, setting the parameter **12** to value **1**;
7. burner ignites at rated flow. Wait until boiler reaches normal conditions (ca. 5 minutes). If the **CO2** value in fumes at a **Qn** rated flow for the **type of used gas** is included in the values indicated in the table, exit the technical menu (boiler switches back to **OFF**), otherwise the gas flow rate must be adjusted turning the **R.Q.** screw. **ADJ.** . **ATTENTION: screw must be turned by 1/4 - 1/2-turn at a time**, and then it is necessary to wait 1 minute to let measured values stabilise:
   - if the **CO2** value is **HIGHER** than allowed, turn the screw **2 CLOCKWISE**;
   - if the **CO2** value is **LOWER** than allowed, turn the screw **2 COUNTERCLOCKWISE**

Note: *If you have adjusted CO2 at rated flow, it is advisable to check again CO2 value at reduced flow (points from 3 to 5.)*

8. set parameter **12** to value **0**, the4 exit technical menu (see "Boiler parameter setting (technical menu)" on page 27). Boiler switches back to OFF;

IMPORTANT: after verification or adjustment it is ESSENTIAL:

- to close, on the gas valve, the **PINT** pressure connection point, by screwing relevant screw;
- close fume connection points by means of the relevant screw plugs;
- seal gas valve's screws **1** and/or **2**, if they have been used;
- verify the correct seal of the fume circuit, in particular the seal of the fume connection points.

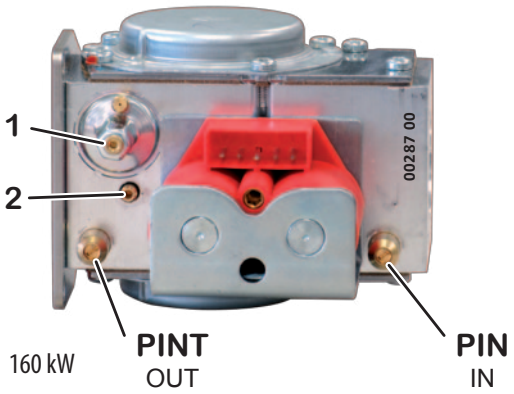

Heating max. power adjustment

Maximum heating power must be adjusted according to the system needs (defined in the project). The various thermal capacities of the boiler, the relevant values on the display and the fan rpm can be found in "Capacity - display - rotations" on page 29.

1. It is necessary to know the value of the maximum power required by the heating system (specified in the project of the system);

   Make sure that the heat produced by the boiler can be disposed by radiators (and/or radiating panels / underfloor heating systems).

2. enter the technical menu (see "Boiler parameter setting (technical menu)" on page 27), select parameter **04** and prepare to modify its value. Burner ignites;
3. referring to "Capacity - display - rotations" on page 29, set parameter **04** to the value corresponding to the necessary thermal capacity;

   Note: *the value from 00 to 99 which appears on the display in this phase can be detected once adjustment is completed and used again as a quick reference to adjust boiler at the same power value.*

4. to switch off burner, exit technical menu (see "Boiler parameter setting (technical menu)" on page 27). Boiler switches back to OFF;

Heating MAX power is now adjusted.

Capacity - display - rotations

	G20			APPROXIMATE VALUE	G31		
	THERMAL FLOW RATE		FAN ROTATION NR.		THERMAL FLOW RATE		FAN ROTATION NR.
	kW	kcal/h		par. 04	kW	kcal/h	
Time Power 160 K	MIN. 25	21500	1500	0	MIN. 25	21500	1500
	38.6	33196	2100	10	39.5	33970	2050
	51.8	44548	2700	20	53.2	45752	2650
	65.4	56244	3300	30	65.8	56588	3200
	79.1	68026	3900	40	78.4	67424	3800
	90.2	77572	4450	50	90.4	77744	4350
	102.8	88408	5050	60	101.9	87634	4950
	115.5	99330	5650	70	113.9	97954	5500
	128.3	110338	6250	80	125.9	108274	6100
	140.4	120744	6800	90	137.0	117820	6650
	MAX. 150	129000	7400	99	MAX. 150	129000	7200

Settings on electronic board

Boiler is equipped with microprocessor modulation board, provided with a series of **six SW1÷SW6 micro-switches** and **two potentiometers**, or trimmers, **P1 and P2**.

Cut power to the boiler before switching board on. Restore power supply only after having closed the dashboard again.

Modifications to micro-switches and potentiometers have no effect until boiler is electrically powered (they are read during board starting phase, when power supply is restored).

In all boilers of Time Power range, setting will have to be the following, otherwise boiler will not work correctly:

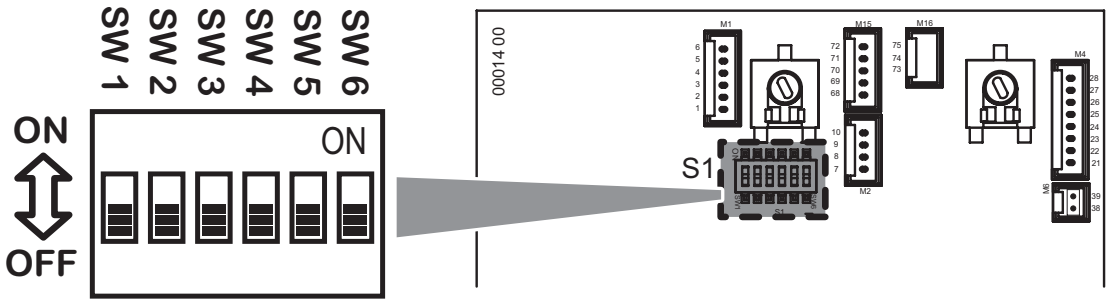

- ▶ micro-switches **SW1÷SW6 in OFF position**
- ▶ positioning of **P1** and **P2** potentiometers does not matter, but it is advisable anyway to leave them in factory position with **P1** completely turned clockwise and **P2** completely counterclockwise as shown in the figure.

TECHNICIAN

Alarms - boiler shut-down

After a malfunctioning, boiler can shut down and show a specific signal, e.g. **RESET** or **SERVICE** on the display accompanied by an alarm code **"E..."**. The following table contains all alarm signals, most probable causes and suggested solutions. In general:

- **RESET** it identifies **user resettable alarms** by pressing key RESET . Usually, ***it flashes***, but there is a limit of 5 resets in 24 hours. After the last one is performed, pressing the key RESET will have no effect. *In order to have another 5 starting attempts, you can cut boiler power supply off for 30 seconds, operating on the specific external general switch, even if this operation will probably not solve the problem and it will be necessary to refer to the Assistance Service;*
- **SERVICE** It identifies **alarms which can not be reset by the user**, since they are generated by the diagnosis system when a component turns out to be faulty. *The user can cut boiler power supply off for 30 seconds, operating on the specific external general switch, but if alarm is triggered again, it is necessary to refer to the Assistance Service.*

Table descriptions accompanied by the symbol and/or in the grey tables are always reserved to the Technician.

FB Actual	Probable cause	Suggested solutions
RESET E01	Boiler just installed (gas mixed with air).	Try ignition for some times by pressing key RESET. *After having used all of the 5 starting attempts, it is possible to cut boiler electric power supply off for 30 seconds, operating on the specific external general switch, to have other 5 attempts.*
	Flame turned off or did not turn on	Restore boiler function by pressing key RESET.
		in case of frequent shut-downs, verify the correct combustion and the good cleaning and operation condition of the burner.
	Incorrect combustion / flame separation from burner	Check that suction and exhaust ducts and relevant terminals are clean and in good condition, and that there are no leakages or blow-by in suction or exhaust ducts. In installation phase, prescriptions, slopes and measurements must have been observed (ref. "Flue fitting" on page 26). ***Note for the TECHNICIAN:*** *Burner flame is not detected by the control electronics because it did not turn on or it unexpectedly turned off, or it separated itself from burner because of incorrect combustion. This can be caused, for example, by combustion products returning to the suction channel, leakages in suction and discharge channels or dimensioning errors of channels (too long or short lengths, and/or errors of use of the diaphragm on boiler outlet).*
	Incorrect electric power supply	Verify that Phase, Neutral and Ground connections are correct and efficient and in particular that Phase and Neutral are not inverted (see "Boiler electric diagram:" on page 15). ***Note:*** *The problem might be caused also by an incorrect power distribution by the supplier Company of electric energy (unbalanced neutral).*
	Condensation discharge problems	Verify and restore the correct condensation discharge **Attention!** Do NOT open the combustion unit before freeing discharge and removing condensation accumulated in the combustion chamber. *The alarm is triggered by condensation which, after having partially filled the combustion chamber, reaches the level of the detection electrode, preventing the detection of the flame ionisation.* Therefore, verify the correct combustion and the good cleaning and operation condition of the burner.
RESET E02	boiler has overheated and the safety thermostat has intervened.	Restore boiler function by pressing key RESET. If shut-down is repeated, wait for a reasonable period of time for boiler cooling (20-30 minutes) and try another restore process. If shut-down continues or occurs again, call the Assistance Service.
		Verify safety thermostat function. Look for the overheating cause, e.g. an insufficient circulation in the main circuit, gas valve maximum pressure not within the limits or excessive heating maximum power for the system.
SERVICE E03	Triggering of the Thermostat of the Combustion Unit (overheating of the Combustion Unit)	Solve the problem which caused overheating. ***Cut boiler power supply off,*** remove front casing and reset the Thermostat of the Combustion Unit through a manual reset key positioned in the middle of the component. ***Note for the TECHNICIAN:*** *The condensation combustion unit has overheated and the relevant thermostat (see page 35) has intervened. This is a protection for the combustion unit, but it is usually anticipated by the other safety thermostats. Should these devices not intervene because of failure and should the burner keep overheating, the Thermostat of the Combustion Unit will control the boiler shut-down to avoid damages to the combustion unit.*
	Triggering of the Fume Thermal Fuse (too hot fumes exiting the boiler)	Solve the problem that caused fume overheating, then replace Fume Thermal Fuse. ***Note for the TECHNICIAN:*** *The Fume Thermal Fuse protects exhaust ducts (made of polypropylene, material suitable for condensation acidity) from high temperatures and from the subsequent fusion or deformation. Component triggering is caused by its fusion and therefore its replacement is needed. For component location see page 35.*
	Triggering of the Thermal Fuse of the Combustion Unit (overheating of the Combustion Unit)	Solve the problem which caused overheating, then replace combustion unit. ***Note for the TECHNICIAN:*** *The condensation combustion unit has overheated and the relevant thermal fuse (see page 35) was interrupted. This is an extreme protection which is usually anticipated by the other safety thermostats. Should these devices not intervene because of failure and should the burner keep overheating, the thermal fuse will control the boiler shut-down to avoid damages to the rooms where boiler is installed, but the combustion unit must be considered as damaged and replaced and a general check of the whole boiler is needed to check if there are any damages to components and/or wiring.*
SERVICE E05	System delivery temperature probe failure.	System delivery temperature probe wiring check. System delivery temperature probe replacement.
RESET E08	Possible closure of flues and air pipes while burner is ON	Press RESET for unlocking the boiler; if the alarm appears again, please contact the Service Man.
		Check the dimensions and effectiveness of flues system (see page 26). Clean them if needed in order to avoid any residual dirty or condense due to wrong slope. Check the effectiveness of electrode. *This alarms appears if there is a repetitive loss flame, after being detected.*

TECHNICIAN

FB Actual	Probable cause	Suggested solutions
RESET E10	Insufficient system pressure *(system minimum pressure switch triggering)*	Restore system correct pressure *Note: Keep in mind that cold pressure, in normal conditions, should not decrease in time. Should this happen, there is probably a leakage in the system. Leakages can be small enough not to leave evident traces, but over time they may let pressure decrease. Also radiator purge valves manual opening (voluntary or involuntary) lets pressure decrease. Make sure that this does not occur.*
SERVICE E12	Domestic water storage temperature probe failure.	Domestic water storage temperature probe wiring check Domestic water storage temperature probe replacement *Note: In probe absence (boiler unit not present or domestic water storage temperature managed by thermostatic contact or solar system) verify that a 2.2 kohm 1/2 W resistance (as factory arrangement, see "Boiler electric diagram:" on page 15) is installed on the terminals destined to the STB boiler temperature probe.*
SERVICE E15	System return temperature probe failure.	System return temperature probe wiring check. System return temperature probe replacement.
RESET E16	fan problem. Burner fan is stopped or rotates at a wrong rpm.	**User:** Try boiler restoration pressing key RESET . If shut-down continues or occurs again, call the Assistance Service. Verify fan function, in particular its speed, using parameter **18** (see "Boiler parameter setting (technical menu)" on page 27). If necessary, replace fan.
SERVICE E22	Non-consistent stored data	**User:** Cut boiler electric power supply off through the relevant external omnipolar switch and restore it after some minutes. If shut-down continues or occurs again, call the Assistance Service. Adjust boiler again ("Heating max. power adjustment" on page 29 and "Settings on electronic board" on page 29) to update board memory data. Replace management board (following operations: "Heating max. power adjustment" on page 29 and "Settings on electronic board" on page 29).
RESET E24	Underfloor heating system safety thermostat triggering: delivery temperature to system is too high; defect, fault or malfunctioning of underfloor heating system.	Underfloor heating system and floor tiles are subject to sudden changes in temperature and therefore a well-built underfloor heating system foresees one or more safety thermostats which, when intervening, shut down boiler. Try boiler restore process by pressing RESET (after waiting for a sufficient period of time to enable system cooling and thermostat deactivation). If shut-down occurs again, call the Assistance Service. ***Note:*** *In presence of this alarm, also hot water production is blocked.* **In case of no underfloor heating system**, verify integrity of the jumper connecting terminals 57 and 58 of the M12 connector (see "Boiler electric diagram:" on page 15). **When underfloor heating system is present**, verify system delivery temperatures on boiler and control unit for low-temperature systems (if present). Replace faulty or out-of-tolerance thermostats. Verify correct position of thermostats on system.
RESET E29	Possible closure of flues and air pipes before burner ignition	Press RESET for unlocking the boiler; if the alarm appears again, please contact the Service Man. Check the dimensions and effectiveness of flues system (see page 26). Clean them if needed in order to avoid any residual dirty or condense due to wrong slope. *At every ignition, fan needs to pass in 8 sec a threshold which identify the correct working of fan and flues discharge system. If not, this could mean flues discharge a bit closed or flues re-circulation between flues and air.*
SERVICE E31	Communication error between Remote Control (if present) and boiler	**User:** select **Summer** mode by pressing ⏻ . Problems on optional Remote Control electric line (passes close to power supply cables or other electromagnetic field sources, faulty connection; cable longer than 50 metres).
SERVICE E33 E34	Wiring setting error.	**User:** Try boiler restoration pressing key RESET . If shut-down continues or occurs again, call the Assistance Service. Refer to the electric diagram (page 15) and check connection integrity, in particular the possible connections (jumper) present between two contacts of the same connector (on wiring connections to electronic board).
RESET E35	Parasitic flame Control electronics has detected the presence of the flame in the burner in a moment in which it is not foreseen	Wait for boiler automatic restoration (5 minutes) or manually restore boiler function by pressing RESET. If shut-down continues or occurs again, call the Assistance Service. Recognise any possible malfunctioning of gas valve (which does not interrupt gas flow and therefore burner stays on) or electronics, flame control section (which detects flame presence also when this is not present).

FB Actual	Probable cause	Suggested solutions
SERVICE E38	External temperature probe (optional) failure. External temperature probe, which was recognised and working, is now faulty	**User:** Call Assistance Service. *Boiler works both in heating and in domestic water function, as if probe had never been installed, therefore, heating system temperature adjustment will be carried out directly and not according to external temperature. The error is displayed to inform that the installed accessory is not efficient any more (consider that, at a superficial analysis, it looks like boiler is working properly).* ***Important: if boiler is electrically turned off and then on again, it is possible** that alarm is not displayed anymore, even if fault persists.* External temperature probe wiring check. External temperature probe replacement. ***Alarm is triggered again only in case of probe resistance out of tolerance or in short circuit. Instead, in case of electric interruption of probe or relevant wiring, at power supply restoration, boiler considers external probe as absent and, in Winter mode, works in standard mode (sliding temperature deactivated).*
SERVICE E39	Freezing suspected After a black-out, when power supply is restored, boiler detects temperatures of Heating and Domestic water probes equal or lower than 0°C	Display shows alarm code E39, while boiler inhibits burner ignition and activates circulation pump, letting water flow in hydraulic circuits. If, in the meantime, temperatures detected by probes become higher than +1°C, alarm disappears and boiler goes back to standard operation. Otherwise, alarm becomes permanent and freezing of water in one or more points of the hydraulic circuit of the boiler and/or of the system (with possible damages to frozen parts) is suspected. In this case, refer to a qualified technician. Recognise/replace parts damaged by freeze.
SERVICE E42	System error Fault of systems inside boiler Mains electric power supply of out-of-tolerance	Investigate failure or fault referring to the technical documentation reserved to assistance centres.
RESET E43	Water overtemperature on system return	Water which goes back to boiler from heating system is too hot: besides indicating heating system malfunctioning, this might cause emission of too hot fumes and damage exhaust system. Before this happens, a specific safety control has triggered. Wait 20-30 minutes to let boiler and system cool, the restore boiler function by pressing RESET. It is not possible to restore operation before system cooling. If boiler shuts down again, refer to a qualified technician.
SERVICE E46	Wiring setting error.	**User:** Try boiler restoration pressing key RESET . If shut-down continues or occurs again, call the Assistance Service. Refer to the electric diagram (page 15) and check connection integrity, in particular the possible connections (jumper) present between two contacts of the same connector (on wiring connections to electronic board).
SERVICE E50	Electric supply out of tolerance for 3 times in last 5 minutes.	Verify, with qualified person, that Electric Supply and its tolerances are respecting –see. "Technical data" on page 33).
SERVICE E62	Communication error between display board and management board	Refer to electric diagram (page 15) and check integrity of connections between display board and management board. Replacement either of the display board or of the management board.
SERVICE E91	System pressure transducer faulty.	Check wiring of system pressure transducer. Replace system pressure transducer.
SERVICE E92	Excessive system pressure	**User:** try to reduce system pressure (e.g. discharging water from purge valve of a radiator or similar) and, if necessary, press key RESET . It may be useful to set, on boiler display, system pressure visualisation, which usually should be around 1 Bar (see "4-digits display setting" on page 7). If shut-down continues or occurs again, call the Assistance Service. Check expansion tank conditions. Check correct filling solenoid valve closing, efficiency of the relevant filter and the penetration of particles into the solenoid valve.
E98	Loss of clock data	Clock/calendar of boiler has lost programming, maybe because of a prolonged electric power supply interruption. Re-set time (see "Time and day setting" on page 6) and verify/restore domestic water programming (see "Setting of the program of boiler no. 3 - User" on page 7).

ErP Data - EU 813/2013

Supplier name: **Italtherm** Contact details: **Italtherm S.p.A. – Via Salvo D'Acquisto – 29010 Pontenure (PC) – Italy**			Models:	**Time Power 160 K**
ErP Data - EU 813/2013		**Symbol**	**Unit**	**Value**
Condensing boiler			Yes/No	Yes
Combination heater			Yes/No	Yes
B1 boiler			Yes/No	No
Cogeneration space heater:			Yes/No	No
Low-temperature (**) boiler			Yes/No	No
ErP space heating	Rated heat output	P_{rated}	kW	145
	Useful heat output at rated heat output and high-temperature regime (*)	P_4	kW	144.6
	Useful heat output at 30% at rated heat output and low-temperature regime (**)	P_1	kW	49.2
	Seasonal space heating energy efficiency (GCV)	η_S	%	–
	Useful efficiency at rated heat output and high-temperature regime (*) (GCV)	η_4	%	88.0
	Useful efficiency at 30% of rated heat output and low-temperature regime (**) (GCV)	η_1	%	98.4
ErP DHW	Declared load profile			–
	Water heating energy efficiency (GCV)	η_{wh}	%	–
	Daily electricity consumption	Q_{elec}	kWh	–
	Daily fuel consumption	Q_{fuel}	kWh	–
Auxiliary electricity consumption	At full load	elmax	kW	0.295
	At part load	elmin	kW	0.032
	In standby mode	P_{SB}	kW	0.005
Other items	Standby heat loss	P_{stby}	kW	0.117
	Ignition burner power consumption	P_{ign}	kW	0
	Sound power level, indoors	L_{WA}	dB	60
	Emissions of nitrogen oxides	NO_X	mg/kWh	45.0

(*) High-temperature regime means: 60 °C return temperature at heater inlet and 80 °C feed temperature at heater outlet.

(**) Low temperature means: for condensing boilers 30 °C, for low-temperature boilers 37 °C and for other heaters 50 °C return temperature (at heater inlet).

GCV = Gross Calorific Value (=Hs)

Product fiche - EU 811/2013

Supplier name: **Italtherm** Contact details: **Italtherm S.p.A. – Via Salvo D'Acquisto – 29010 Pontenure (PC) – Italy**		Models:	**Time Power 160 K**
Product fiche - EU 811/2013	**Symbol**	**Unit**	**Value**
Declared load profile DHW			—
Seasonal energy efficiency for space heating			—
Energy efficiency for water heating			–
Rated heat output	P_{rated}	kW	145
Annual energy consumption	Q_{HE}	GJ	258
Annual electricity consumption	AEC	kWh	–
Annual fuel consumption	AFC	GJ	–
Seasonal space heating energy efficiency (GCV)	η_S	%	–
Water heating energy efficiency (GCV)	η_{wh}	%	–
Sound power level, indoors	L_{WA}	dB	60

GCV = Gross Calorific Value (=Hs)

Technical data

TECHNICAL SPECIFICATIONS ***Reference gas***	**Unit of measurement**	**Time Power 160 K**	
		G20	**G31**
EC Certificate		0476 CQ 1281	
Category		II_{2H3P}	
Refrigerant		B23P - C13 - C33 - C43 - C53 - C63 - C83 - C93	
Operation temperature (min÷max)	°C	0 ÷ +60	
Maximum Thermal Capacity	kW	150.0	150.0
Minimum Thermal Capacity	kW	25.0	25.0
Maximum Thermal Power 60°/80°C *	kW	144.6	144.6
Minimum Thermal Power 60°/80°C *	kW	23.8	23.8
Maximum Thermal Power 30°/50°C *	kW	157.50	157.50
Minimum Thermal Power 30°/50°C *	kW	27.0	27.0
Class NO_X		6	6
Correct CO 0% O_2 (at Qn)	ppm	176.1	141.0
CO_2 (at Qn)	%	9.3	10.2
Condensation quantity at Qn (at 30°/50°C *)	l/h	18.40	18.40
Condensation quantity at Qr (at 30°/50°C *)	l/h	2.90	2.90

(continues)

TECHNICAL DATA *(continues)*	Unit of measurement	Time Power 160 K	
Reference gas		G20	G31
Condensation pH value	pH	2.8	2.8
Fume temperature (at Qn)	°C	79.7	62.3
Fume mass flow (at 60/80°C at Qn)	kg/h	240.63	249.01

MEASURED EFFICIENCY

Nominal efficiency (NCV) at 60°/80°C *	%	96.40
Nominal efficiency (NCV) at 30°/50°C *	%	105.00
Efficiency at 30% load Qa (NCV) at 30°C *	%	109.29

* return temperature / delivery temperature; NCV = Net Calorific Value (=Hi)

HEATING DATA

Temperature selection range (min÷max) in main area, with range at normal / low temperature	°C	35÷78 / 20÷45
Temperature selection range (min÷max) secondary area	°C	20÷78
Characteristics of water (or of thermal fluid) of heating system (* = if there are aluminium parts along the heating system)	°f pH	5 ÷ 15 °f pH 7.5 ÷ 9.5 (7.5 ÷ 8.5 *)
Expansion tank	l	none (to foresee on the system, by the installer)
Maximum working pressure	bar	4.5
Boiler water content	l	14.0
Max temperature	°C	95
Boiler anti-freeze function temperature on / off	°C	5 / 30

ELECTRIC CHARACTERISTICS

Voltage/Frequency (rated voltage)	V / Hz	220÷240 / 50 (230V *–15% ... +10%*)
Power (max)	W	480
Protection rating		IP X5D

DIMENSIONAL CHARACTERISTICS

Length - Height - Depth	mm	see "Dimensions, Connections" on page 11
Weight	kg	105.0

CONNECTIONS

Gas and hydraulic connections		see "Dimensions, Connections" on page 11
Flue fitting: types, lengths, diameters		see *"Flue fitting" on page 26*
Min÷max fan residual head (for type C_{63})	Pa	25 ÷ 190

GAS POWER SUPPLY PRESSURES

Rated pressure	mbar	20	37
Pressure at input (min÷max)	mbar	17 ÷ 25	35 ÷ 40

GAS CONSUMPTION

Qmax	m^3/h	15.86	
	kg/h		11.63
Qmin	m^3/h	2.64	
	kg/h		1.94

Thermal module components

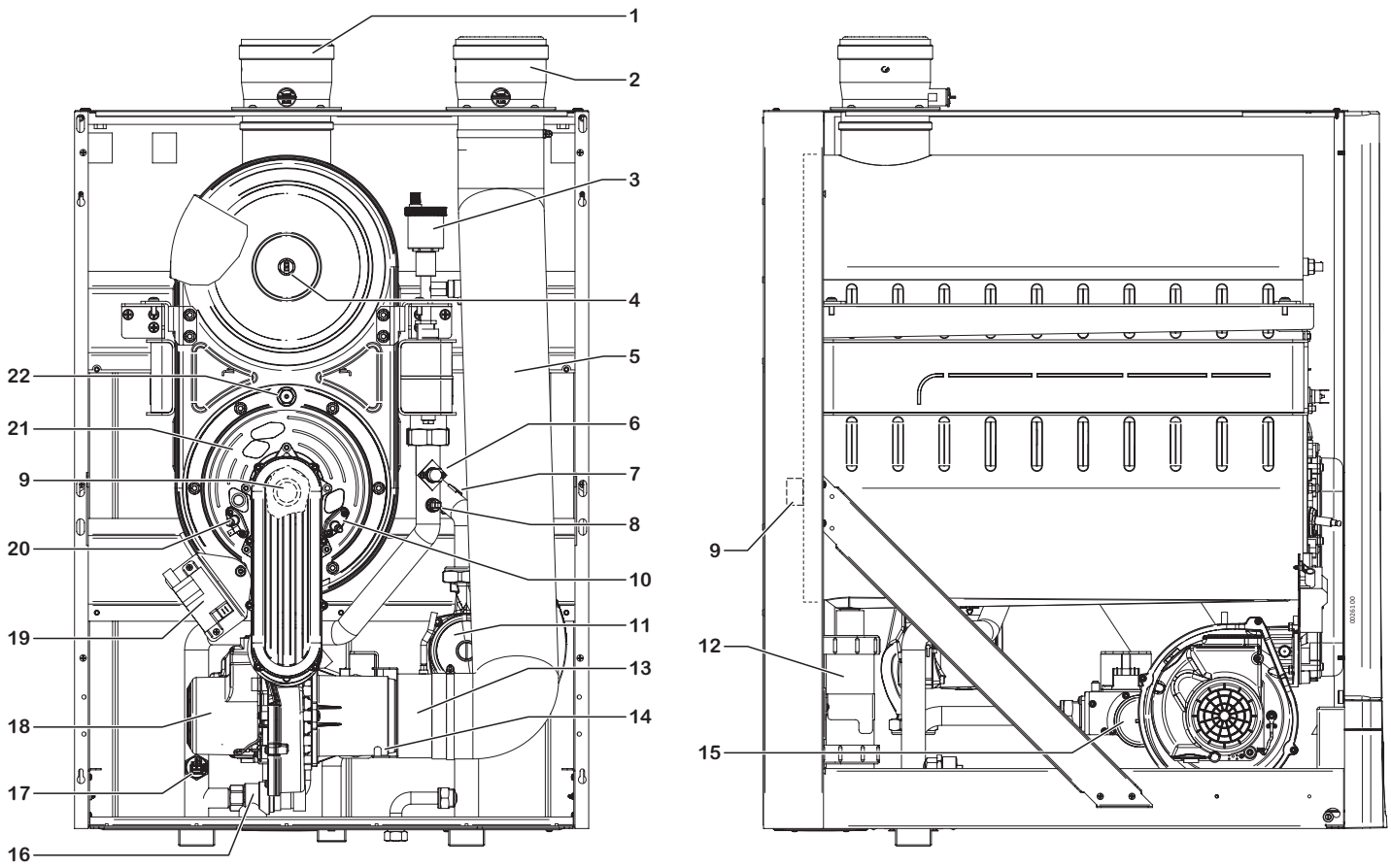

1 Fume exhaust connector (with connection point for combustion test)
2 Suction connector (with connection point for combustion test)
3 Boiler automatic air purging valve
4 Fume thermal fuse
5 Suction hose
6 Boiler safety thermostat (delivery)
7 System return temperature probe
8 System delivery temperature probe
9 Combustion unit thermal fuse (non-replaceable)
10 Ignition electrode
11 Modulating circulation pump
12 Condensation-collecting siphon
13 Mixer (air/gas mixing device)
14 Gas valve compensation connection point
15 Gas valve
16 4.5-bar safety valve
17 System pressure transducer
18 Motor-driven fan
19 Discharge igniter
20 Detection electrode
21 Combustion unit (burner + main exchanger)
22 Combustion unit thermostat (manually resettable)

ITALTHERM

www.italtherm.it

ITALTHERM S.p.A. declines any responsibility for eventual printing and/or transcription errors in the present manual. In order to constantly improve its products, the company has the right to change features and data written in the present manual, at any time and without notice.

960000156_01
20191216

ITALTHERM S.p.A. I Via S. D'Acquisto I 29010 Pontenure (PC) Italy I P.iva - C.F. 01594830331 I Tel (+39) 0523.575611 I **www.italtherm.it**